datacolor AUTOLAB TF

AutoLab TF

Laboratory Dispenser

Technical Manual

Part number: TF-0022-0924

Revision 5.0
24th May 2006

© Copyright 2005 Datacolor. All Rights Reserved. This material may not be reproduced or copied, in whole or in part, without the written permission of Datacolor.

Whilst every effort has been made to ensure the accuracy of this manual, Datacolor can accept no responsibility for any omissions or errors it may contain. Datacolor reserves the right to make improvements and/or changes in the product(s) features and specifications described in this manual at any time.

Index

DOCUMENT VERSION UPDATES 5

ABOUT THIS MANUAL 6

HOW TO USE THIS MANUAL 6

CHAPTER1: GETTING TO KNOW YOUR AUTOLAB TF 7

1-1 PRINCIPLE CHART 7
1-2 GETTING TO KNOW AUTOLAB TF 8
1-2-1 Standard Specification 8
1-2-2 Picture of AutoLab TF with no conveyor (TF-40/80/120/160) 9
1-2-3 Picture of AutoLab TF with conveyor (TF-88/128/168) 9
1-2-4 Line drawings of AutoLab TF models 10
1-3-1 Description of Stock Solution Platform 13
1-3-2 Picture of Stock Solution Platform 14
1-4 AGITATION MODULE 15
1-4-1 Description of Agitation Module 15
1-4-2 Control flowchart of Agitation 16
1-5 X-Y-Z MECHANISM 18
1-5-1 Description of Dispensing X-Y-Z mechanism 18
1-5-2 Pictures of X-Y-Z mechanism 19
1-6 DISPENSE AREA 21
1-6-1 AUTOLAB TF 40/80/120/160 SYSTEM 21
1-6-2 AutoLab TF 88/128/168 System 26
1-6-3 Conveyor 30

CHAPTER 2: HARDWARE 33

2-1 SYSTEM FLOWCHART 33
2-1-1 AUTOLAB TF 40/80/120/160 33
2-1-2 AUTOLAB TFC 88/128/168 34
2-2 ELECTRONIC CABINET 35
2-2-2 Picture of Control Panel 36
2-2-3 Electronic Cabinet 37
2-2-4 Front View Of Electronic Cabinet 38
2-2-5 Side View Of Electronic Cabinet 39
2-2-6 Front View Of New Electronic Cabinet (After TF-0042 order) 40
2-2-7 LA 50B CPU Module 41
2-2-8 LA 50B D.I.O (PNP) Module 43
2-2-9 LA 50B SERVO module 44
2-2-10 232 to 485 Adapter 45
2-2-11 AutoLab TF DS Relay Board 46
2-3 INPUT/OUTPUT DESCRIPTION 47
2-3-1 AutoLab TF-40 Input Definitions 47
2-3-2 AutoLab TF-40 Output Definitions 48
2-3-3 AutoLab TF-80 Input Definitions 49
2-3-4 AutoLab TF-80 Output Definitions 51
2-3-5 AutoLab TF-120/160 Input Definitions 52
2-3-6 AutoLab TF-120/160 Output Definitions 54
2-3-7 AutoLab TF-188/128/168 Input Definition 56
2-3-8 AutoLab TF-188/128/168 Output Definition 58
2-3-9 Electronic Drawing Of AutoLab TF (40/80/120/160) 60
2-3-10 Electronic Drawing Of AutoLab TF (88/128/168) 69
2-4 BALANCE 88
2-4-1 The Parameter Setup Of Balance 88
2-4-2 Balance calibration 94

2-5 SERVO SYSTEM 97
2-5-1 Sanyo PV Type Amplifier Servo System 97
2-5-2 Sanyo Denki PV Type Servo Amplifier 99
2-5-3 Error Message Table For PV Type Servo Amplifier 103
2-5-3 Meaning of parameters in PV type amplifier 108
2-5-4 Sanyo Denki Q type amplifier 113
2-6 CONNECT TO PC 145

CHAPTER 3：TROUBLESHOOTING 146

Error Messages and Solutions 146

Document version updates

Revision 2 has the following updates made compared to revision 1, released:

Addition of information on new model of dispenser, AutoLab TF-88
Amended dimensions for all models
Improved photos now included
Reference to water pressure regulator now included with each system
Reference to improved electronic cabinet with mechanical circuit breaker, instead of electrical
Reference to newer design LA50B (600+N2) CPU
Improved wiring diagrams and tables
Configuration for all Mettler, Precisa and Sartorius scales
Improved technical information on servo amplifier, and error codes
Improved troubleshooting guide

Rev 3
Some formatting changes

Rev 4
Additional information on serve motors added
Additional info on fabric weigh scale settings added
Removal of wiring information removed to separate document, TFWIRMAN.doc
Some amendments made to some of the I/O info on pages 48-60

Rev 5
Some amendments made to some of the system sticker information
Additional information on Q type servo amplifier
Update circuit diagram

About this manual

How to use this manual

This manual focuses on the hardware description and maintenance of the AutoLab TF-40, 80, 88, 120, 160 and 168 dispense. It Includes construction of system, introduction of all PLC modules, maintenance procedure, troubleshooting guide etc. A great deal of information is given herein, which will assist you in obtaining the best performance of the machine.

Fundamentally the manual is arranged as follows:

Chapter 1：GETTING TO KNOW YOUR AUTOLAB TF

Chapter 2：HARDWARE

Chapter 3：TROUBLESHOOTING AND MAINTENANCE

Addendum: Important safety note before operating or using the Datacolor Autolab Dispensing System: It is strongly recommended that all personnel refrain from carrying smartphones, smart devices, or magnetic items in close proximity to the Autolab Dispensing System. In rare instances, we have observed that these devices may cause interference, potentially compromising the dispenser's intended operation and posing a safety risk.

CHAPTER1: GETTING TO KNOW YOUR AutoLab TF

1-1 Principle Chart

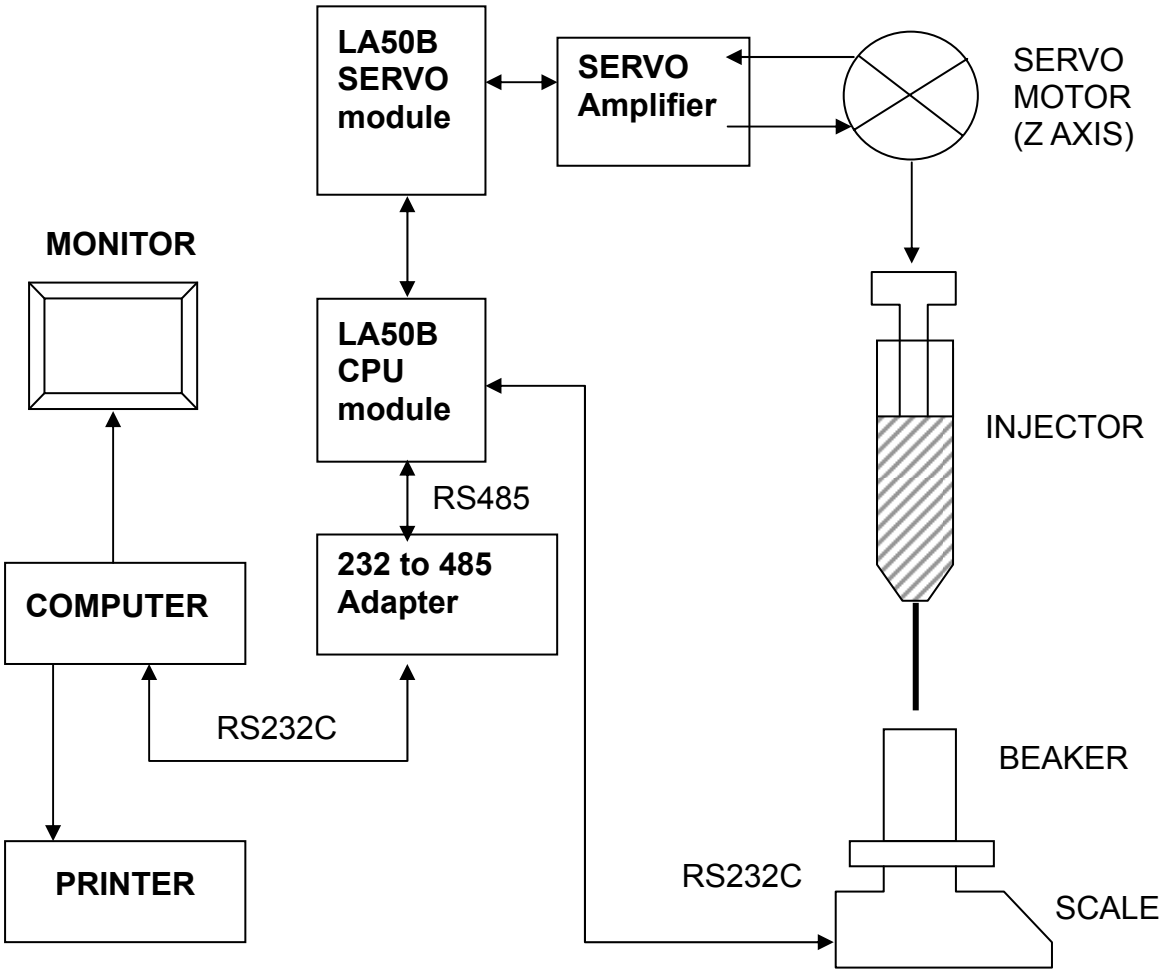

1-2 Getting To Know AutoLab TF

1-2-1 Standard Specification

AutoLab TF	TF 40	TF 80	TF 120	TF 160	TF 88	TF 128	TF 168
Total bottles	40	80	120	160	88	128	168
Number of dye bottles	40	80	120	160	80	120	160
Number of water tank	1	2	2	2	1	1	1
Number of aux. Bottles	NONE				7		
Number of injectors	40	80	120	160	80	120	120
Number of stirrer	40	80	120	160	87	127	127
Number of agitation	40	80	120	160	87	127	127
Number of agitation area	1	2	3	4	2	3	4
Number of dispense scales	1	2			1		
Size of dye bottles	1000cc						
Size of water tank	7 Litre						
Size of aux. Bottles incl. Refill	NONE				5 Litre		
Size of injectors	60cc						
Number of dye pot positions	6 or 4 or 2 or 1						
Maximum height of dye pot (mm)	250	250	250	250	350	350	350
Minimum height of dye pot(mm)	60	60	60	60	60	60	60
Readability of dispense scale	0.01g						
Accuracy of gravimetric dispense	0.02g/+0.3%						
Accuracy of volumetric dispense	+3%						
Dispense speed (12recipes, 3dyes+2chemical+water) (dispensing weight of products)	8-10min						
Dispense range(kg)	0-4kg						
Dimensions Width (mm)	1824	2350	2397	2876	2923	3402	3449
Dimensions Depth (mm)	1423	1423	1725	1423	1725	1423	1725
Dimensions Height (mm)	2007	2007	2007	2007	2007	2007	2007
Weight (kg)	600	800	900	1000	1100	1200	1300
Air pressures required	6.0kg/cm^2						
Water pressure required	1kg/cm^2						
Diameter of water pipe	1/4”						

1-2-2 Picture of AutoLab TF with no conveyor (TF-40/80/120/160)

1-2-3 Picture of AutoLab TF with conveyor (TF-88/128/168)

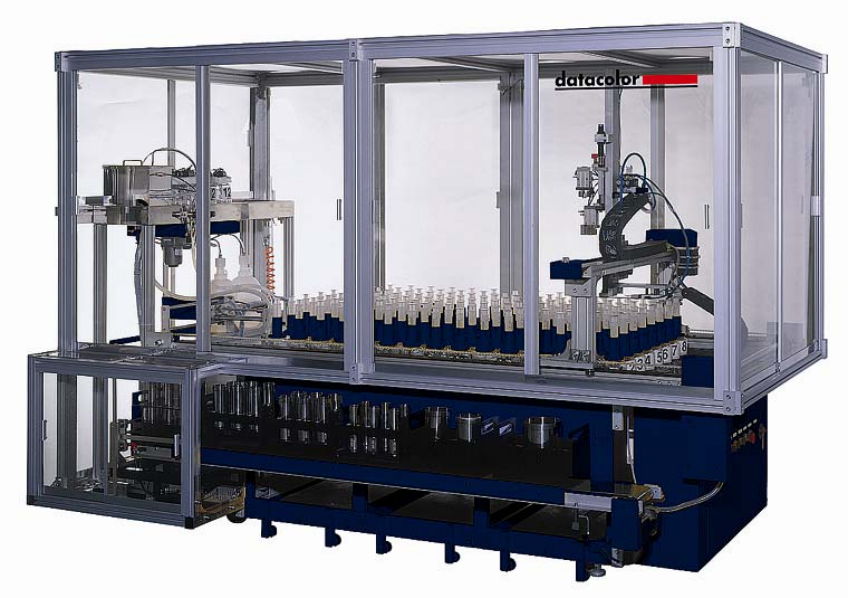

1-2-4 Line drawings of AutoLab TF models

- Line drawing of AutoLab TF-40

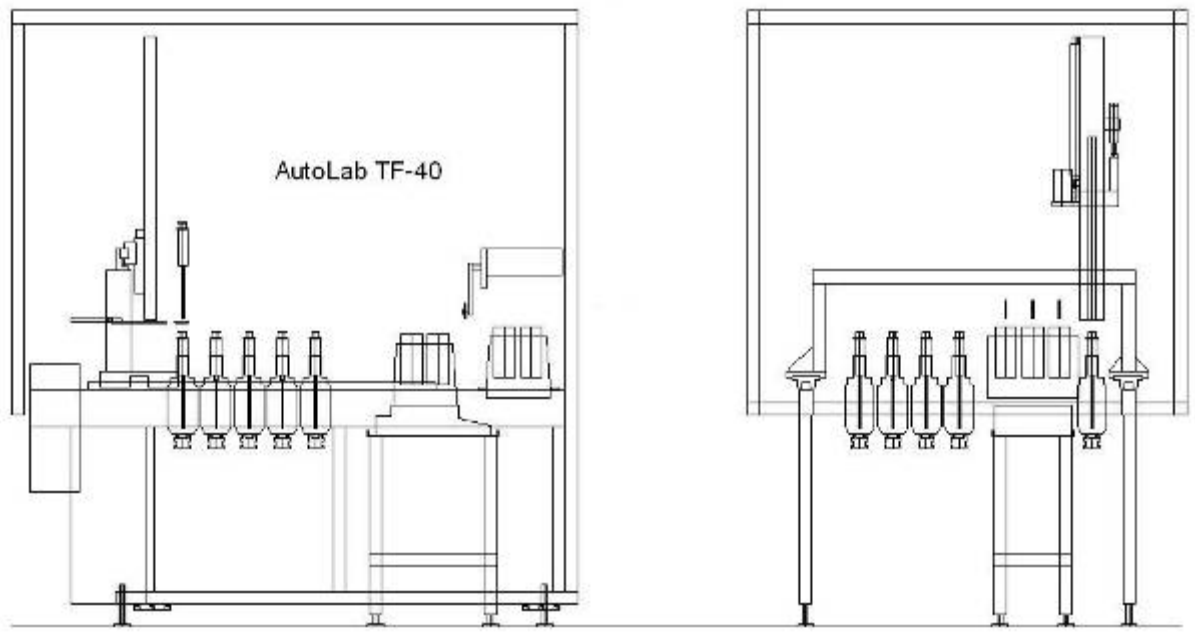

- Line drawing of AutoLab TF-80

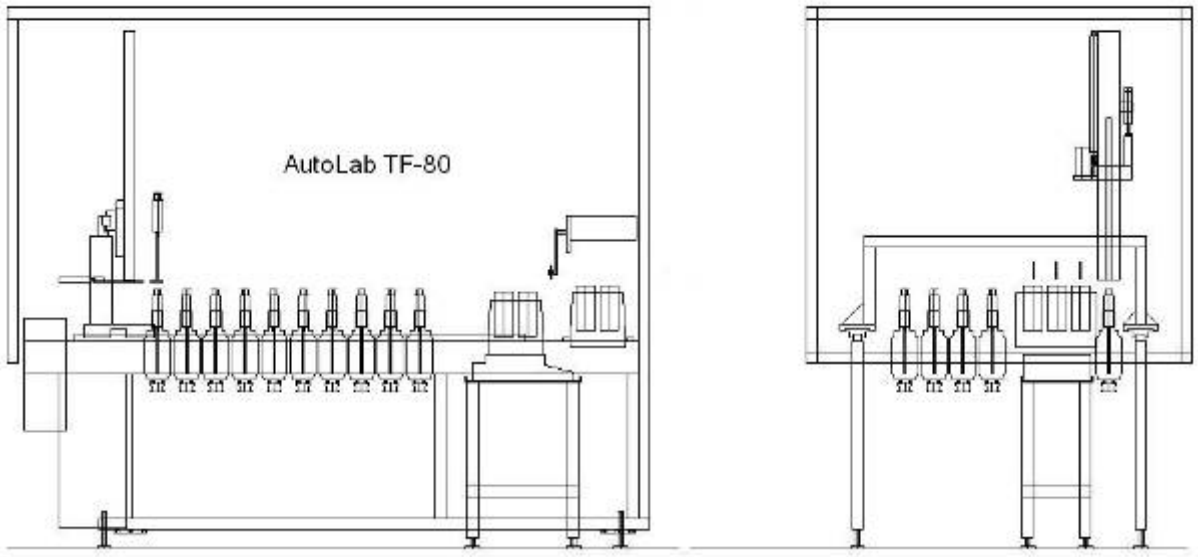

- Line drawing of AutoLab TF-88

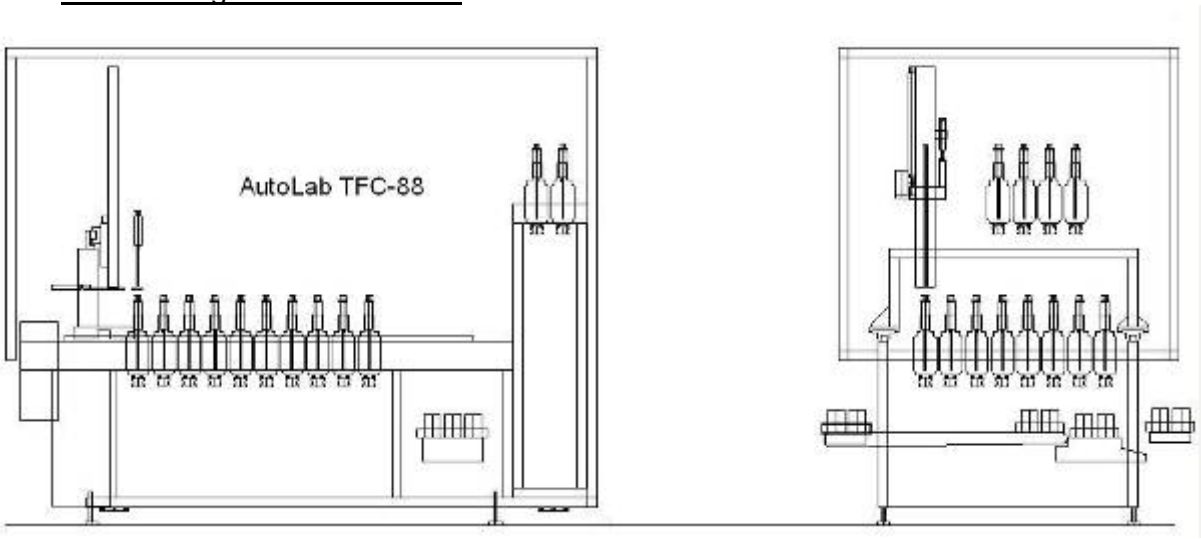

- Line drawing of AutoLab TF-120

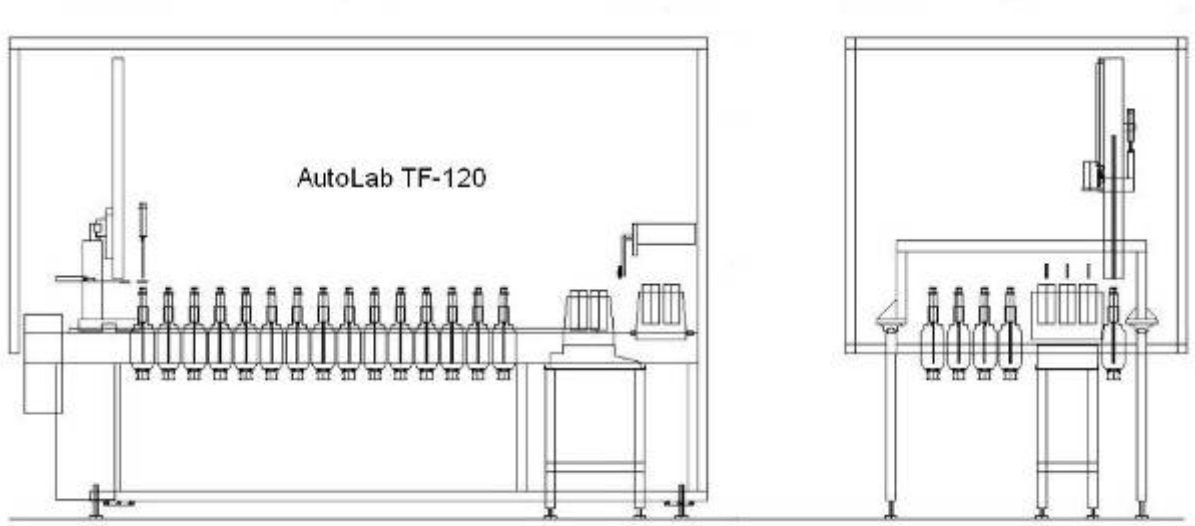

- Line drawing of AutoLab TF-128

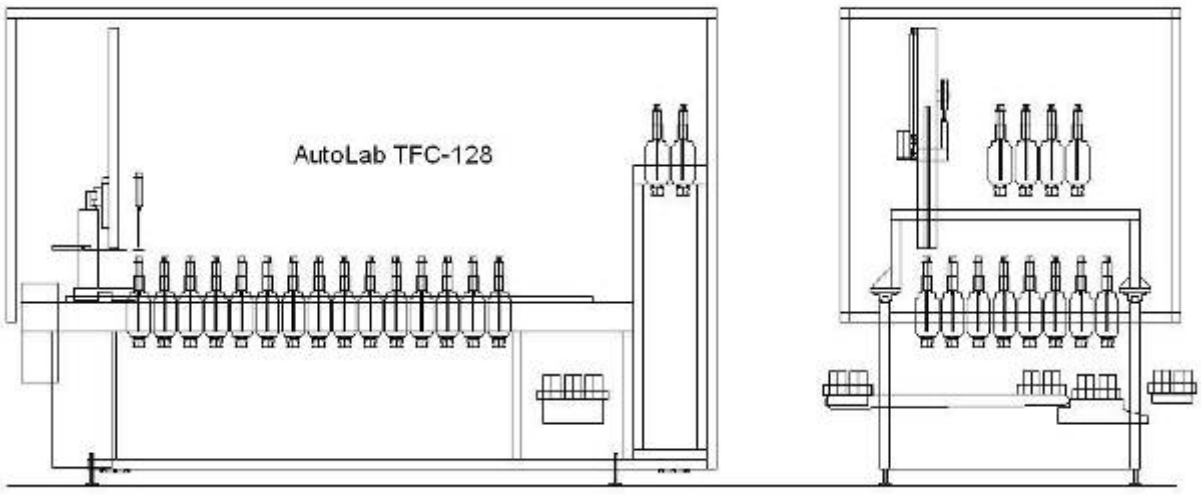

- Line drawing of AutoLab TF-160

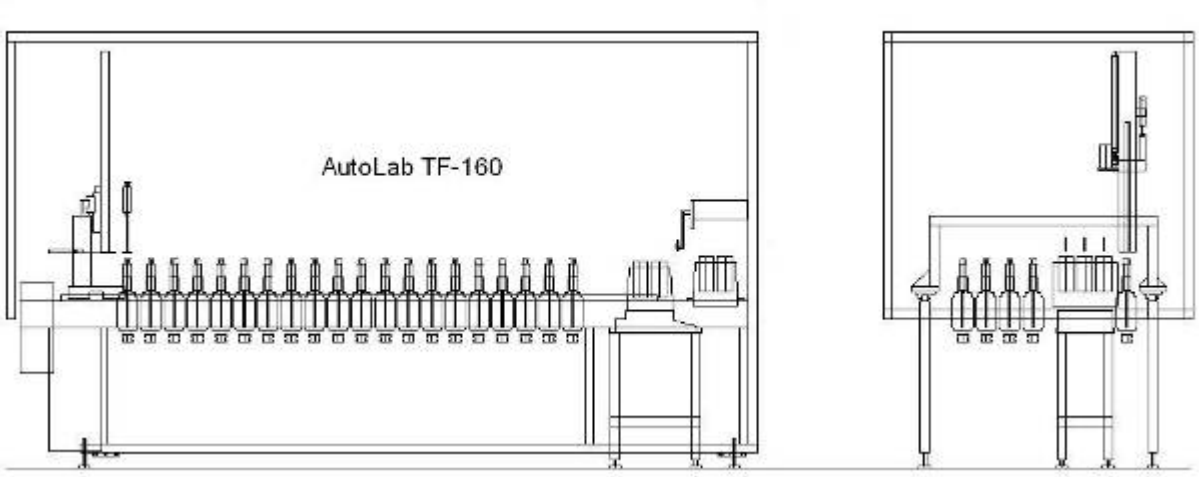

- Line drawing of AutoLab TF-168

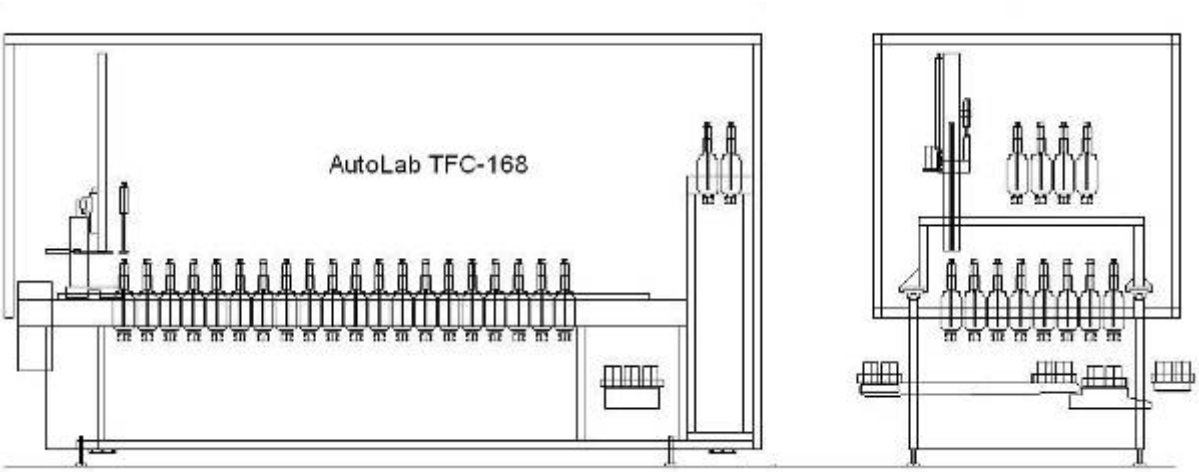

1-3 Stock Solution Platform

1-3-1 Description of Stock Solution Platform

Solution Bottle

For stock of dye solution and its capacity is 1000 ml.

Bottle cap

The blue barrel-drain lid is used to prevent the solution splash out and fasten injectors. There is a scraper inside. When the injector is picked out, it can scrape the solution left on the surface of the injector.

Injector

The injector is used as transport media of solution for dispensing, and it capacity is 60 cc。

Bottle rack

The bottle rack is for locating solution bottles. One bottle rack can locate 40 bottles。

Bottom plate

This bottom plate is used to place the bottles and fasten the locating board. Each plate has a draining hole, which is for draining the leftover solution.

Draining hole

This draining hole is used to drain the leftover solution. It has a connector to connect tube for draining.

1-3-2 Picture of Stock Solution Platform

Stock solution platform

Bottle

Cap

Connector of draining hole (For Draining)

Injector

1-4 Agitation Module

1-4-1 Description of Agitation Module

Motor

This motor agitates agitator by a belt.

Agitator

This device set under each dye solution bottle and auxiliary bottle. The agitator is agitated the stirrer by magnetic force.

Stirrer

Every dye solution bottle and auxiliary bottle has a stirrer. The revolving stirrer mixes the solution.

Speed controller

This speed controller with power switch and speed adjust knob uses to set up the power and speed of the agitation motor by manually.

Agitate control

The agitate control by computer to set up the On/Off interval for each agitate area.

1-4-2 Control flowchart of Agitation

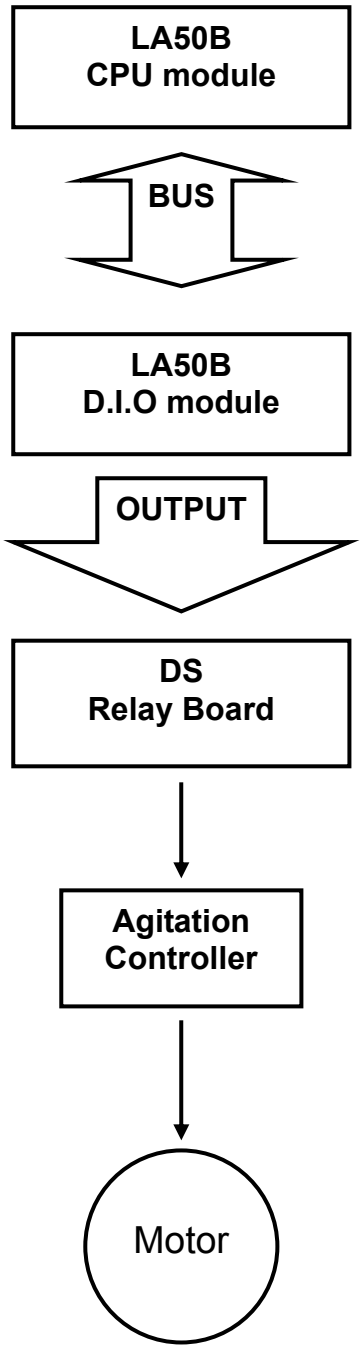

1-4-3 The Pictures of Agitation

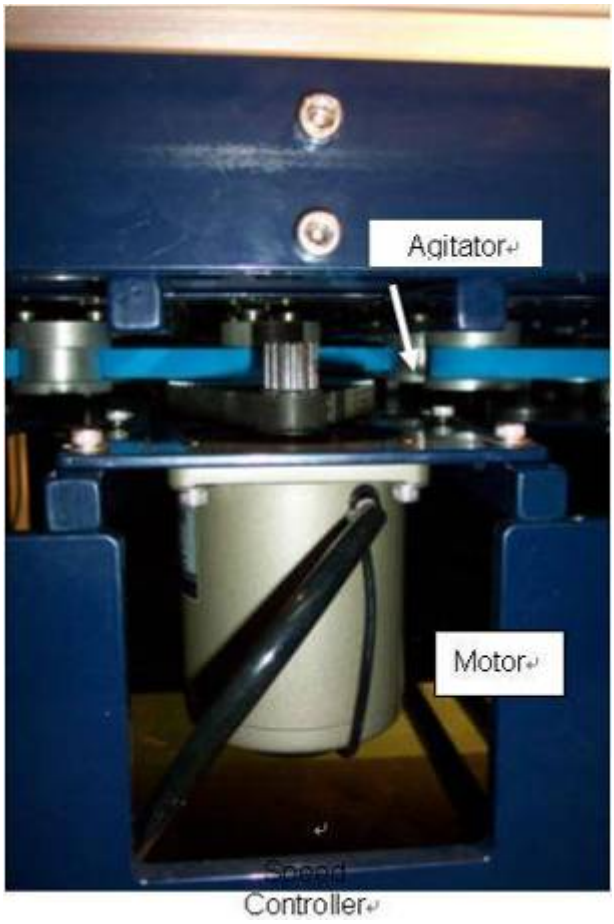

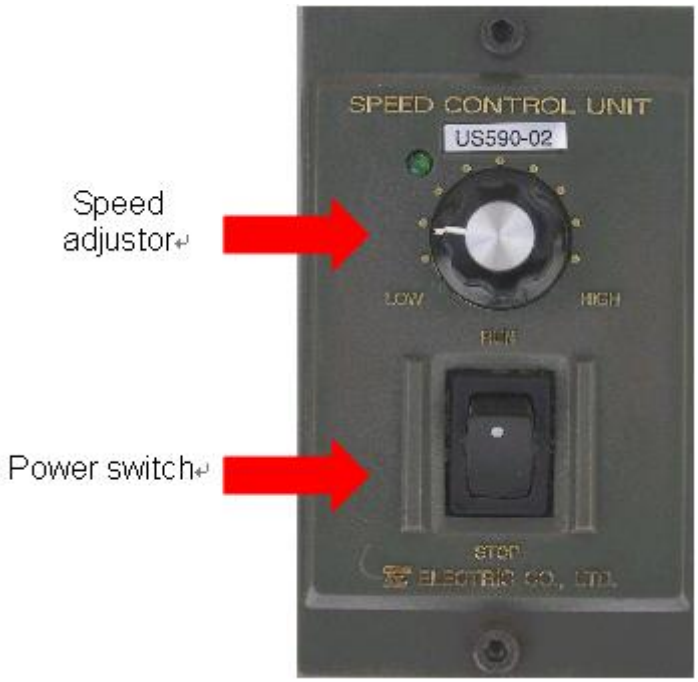

1-5 X-Y-Z mechanism

1-5-1 Description of Dispensing X-Y-Z mechanism

- **Servo motor of X axis**
  This motor moves the robot forward and backward.

- **Servo motor of Y axis**
  This motor moves the robot leftward and rightward.

- **Servo motor of Z axis**
  This motor controls the volume of injector.

- **Home sensors of three axis**
  For position the 3 servo motors. Sensor PM-1204N is for X/Y home sensor. Sensor PL-05N is for Z home sensor

- **Dispensing head cylinder**
  This cylinder controls moves Z axis up/down.

- **Up grab hand cylinder**
  This cylinder controls up grab hand grab and release movement.

- **Down grab hand cylinder**
  This cylinder controls down grab hand grab and release movement.

- **Injector sensor**
  This sensor detect the injector exist or not when the hand grab actives.

- **Anti dripping plate**
  It will be moved out when robot is moving for preventing solution from dripping.

1-5-2 Pictures of X-Y-Z mechanism

Servo motor of X axis

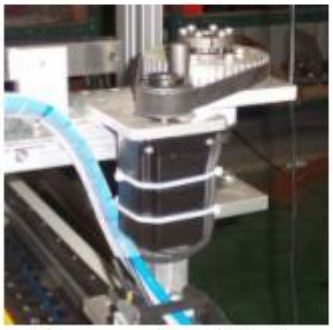

Servo motor of Y axis

X axis homing sensor

Y axis homing sensor

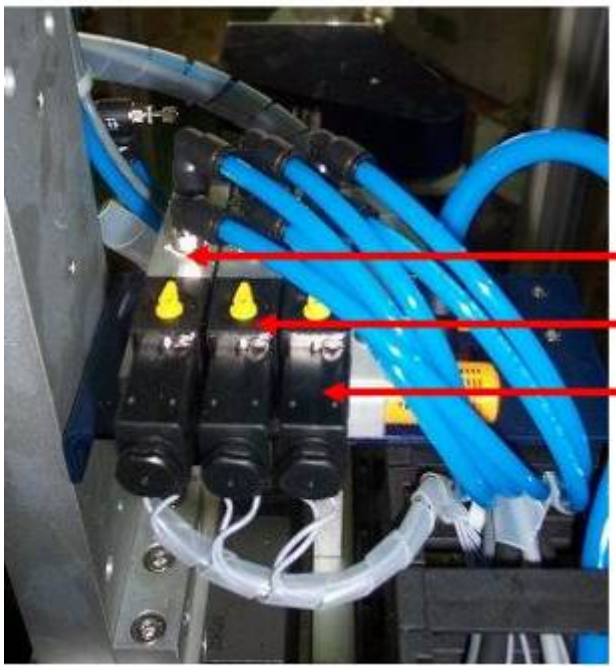

Dispensing Head Cylinder

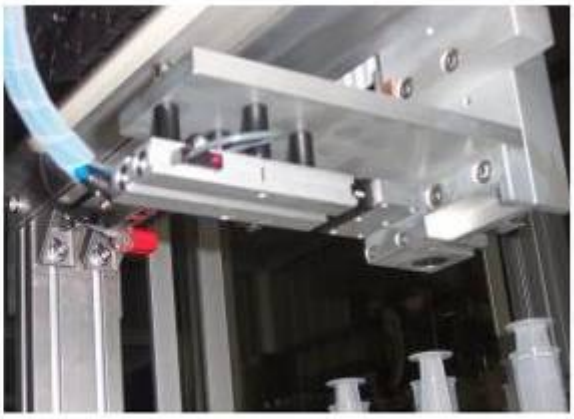

Anti Drip Plate

1-6 Dispense Area

1-6-1 AutoLab TF 40/80/120/160 System

1-6-1-1 Water Dispensing

Water tank

This water tank with level sensor and automatic refill, and the capacity is 7 litres.

Over flow tube

For overflow, in case of refill control errors, water will be able to flow away from the tube.

Drain cock valve

For open the drain manually.

Dispense Valve

For dispense water.

Dye Pot Tray sensor

For detect type of dye pot tray, up to 4 types of dye pot trays can be identified

Balance up/down air cylinder

This device is used to control balance up/down.

Outlet container push air valve

This device is used to control the cylinder that move the outlet container push bar to front and back position.

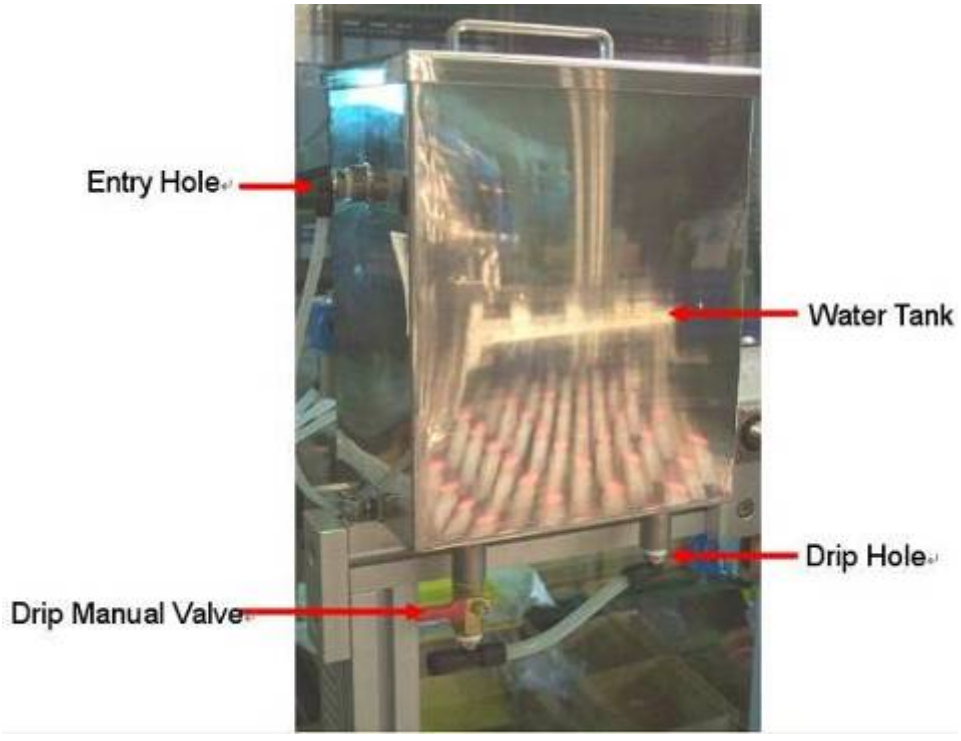

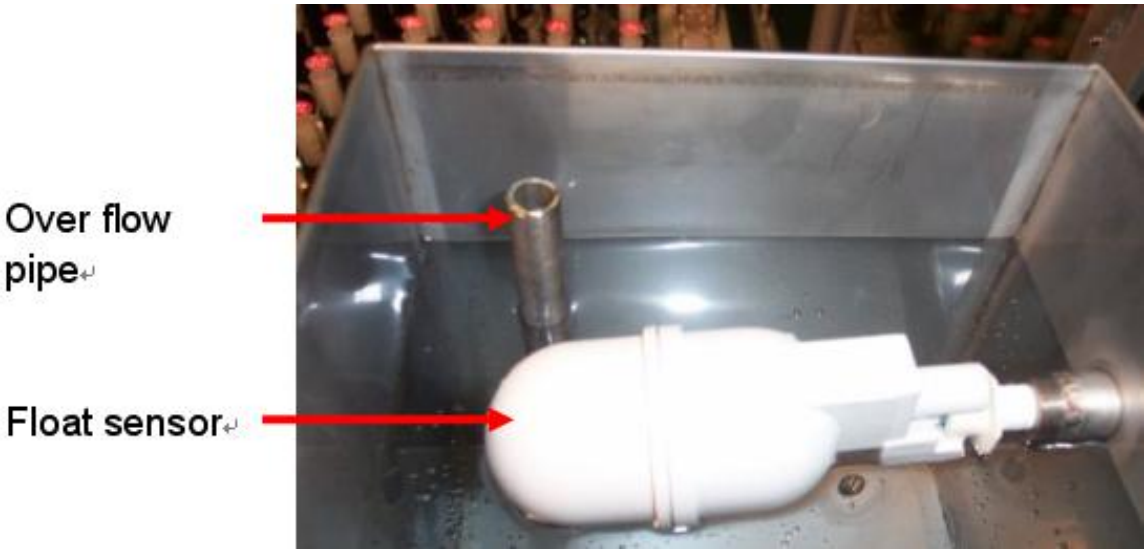
Over flow pipe
Float sensor

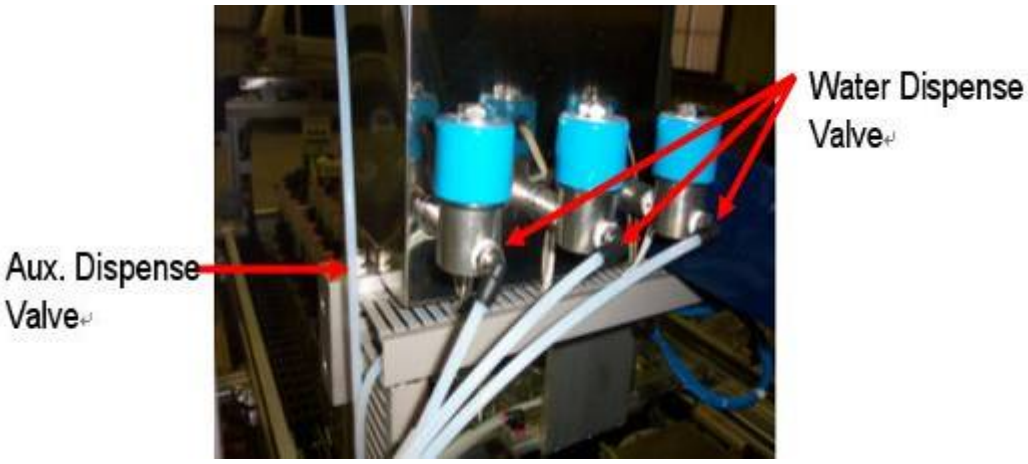
Water Dispense Valve
Aux. Dispense Valve

1-6-1-2 Dyepot tray movement

Ack button

Push the button moving dye pot to and out the scale position.

Air regulator

For set the air pressure. The pressure should be within the range of 4.5~ 6.0 kg/cm^2

Air valves of water dispensing head

The 5-3 solenoid valve is used to control the front, middle and back dispense head.

Air valve of dyepot tray up/down

The 5-2 solenoid valve is used to control the cylinder movement of upward and downward.

Air valve of dye pot tray

The 5-1 solenoid valve is used to control the movement of dye pot cylinder

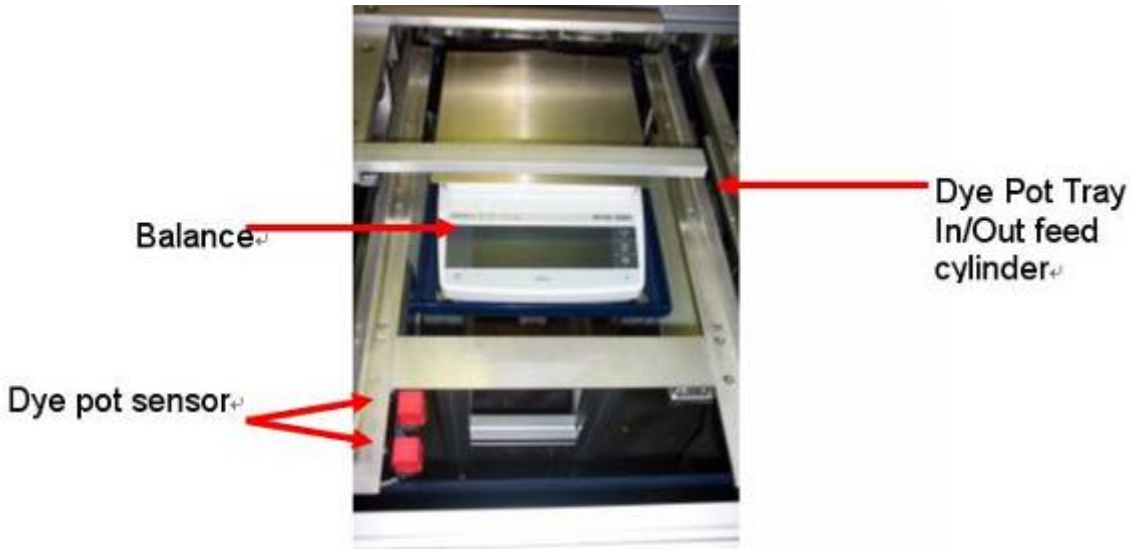

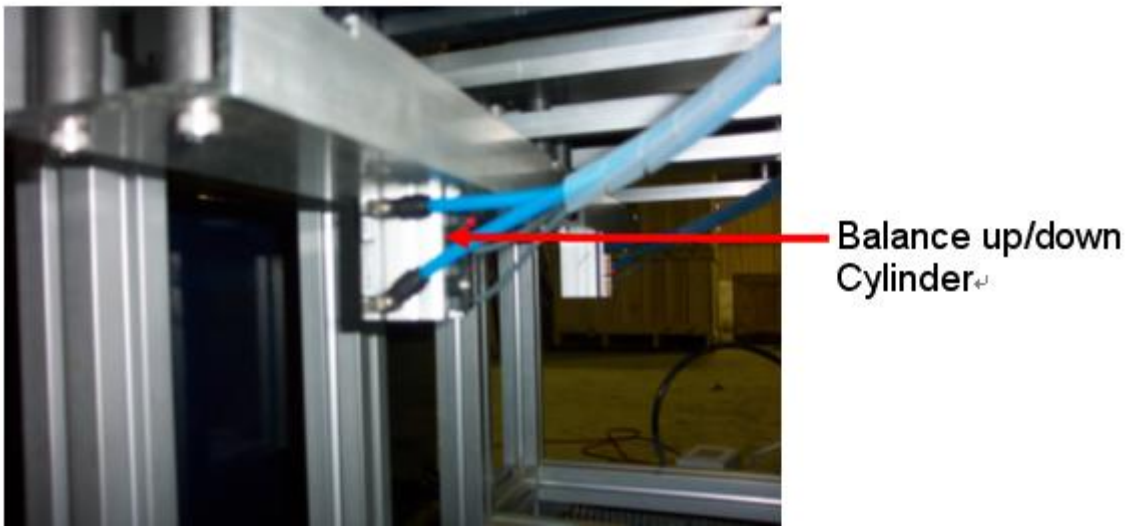

1-6-1-3 Pictures of Electronic Cabinet for Water Dispense

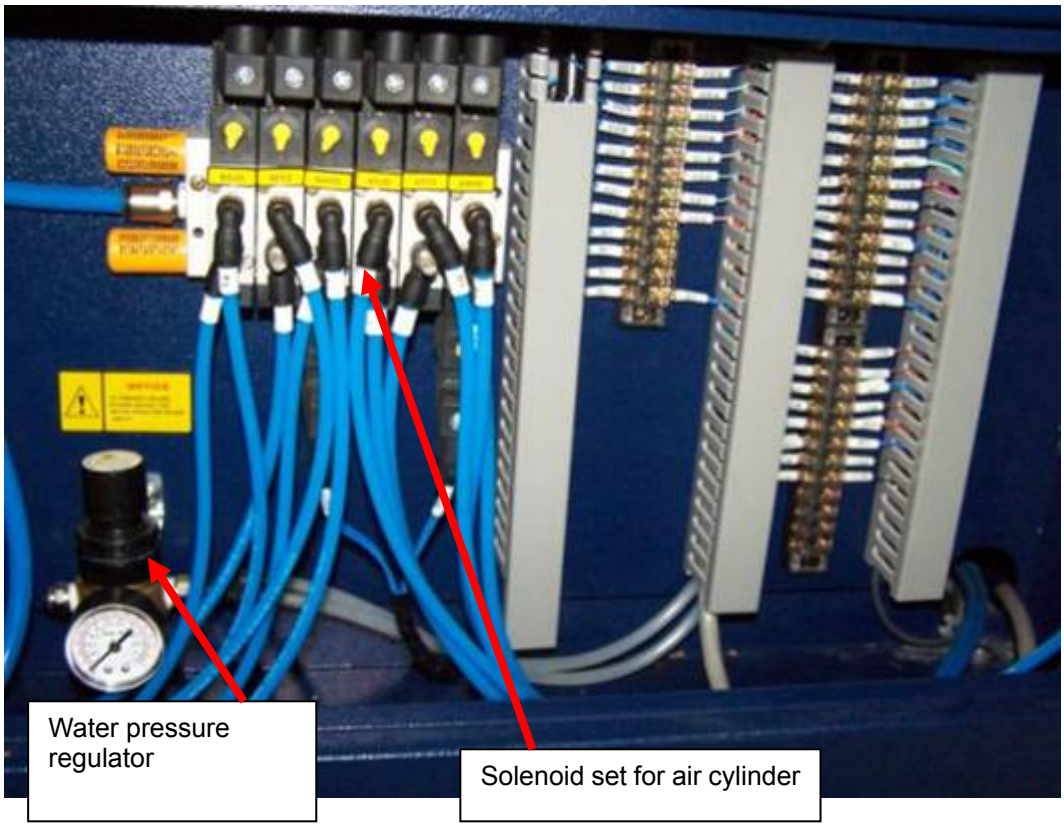

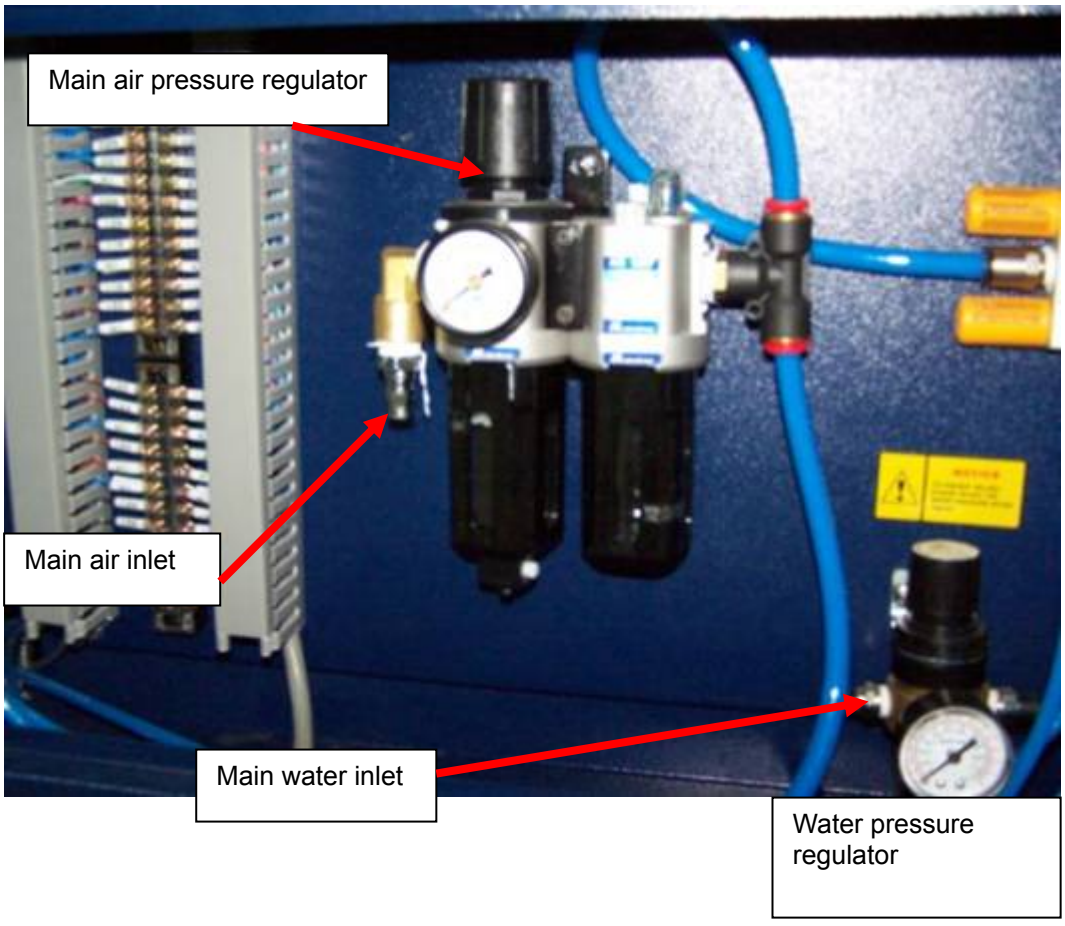

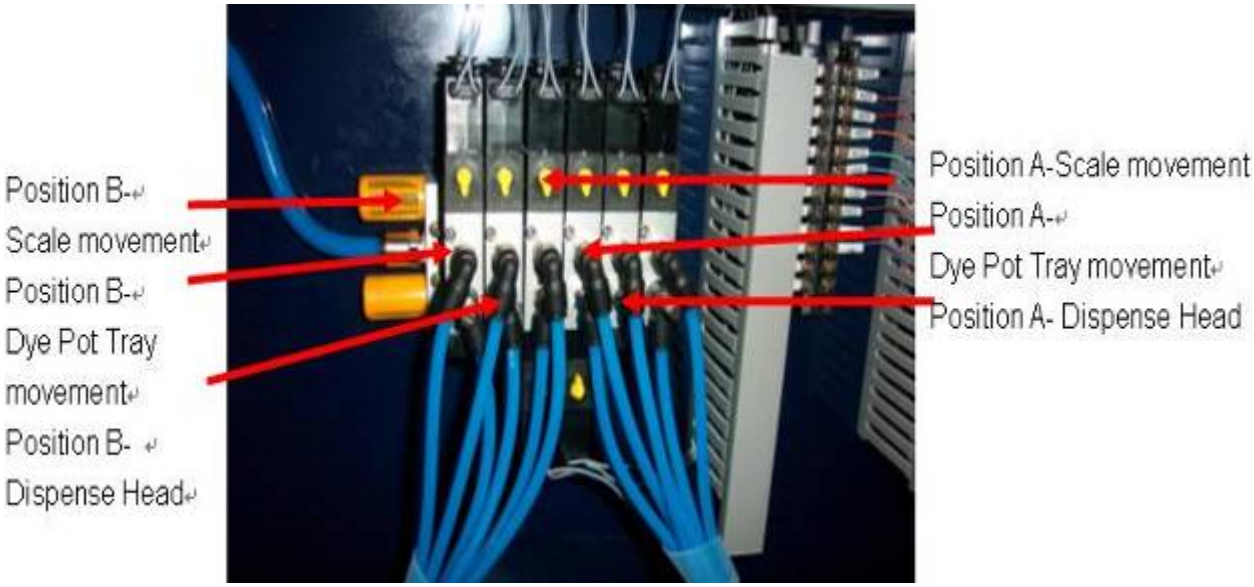
Position B-
Scale movement
Position B-
Dye Pot Tray movement
Position B-
Dispense Head
Position A-Scale movement
Position A-
Dye Pot Tray movement
Position A- Dispense Head

1-6-2 AutoLab TF 88/128/168 System

1-6-2-1 Auxiliary/Water Dispensing

Auxiliary bottle

There are 7 bottles of auxiliary solution, and each one is 1000 ml.

Agitate device

Containing agitation mechanism for all auxiliary bottles, the power on/off and speed is controlled by manual.

Water tank

This water tank with level sensor and automatic refill, and the size is 7 litres.

Auxiliary bottle

There are 7 auxiliary bottles for refill, and each capacity is 5 litres.

Auxiliary refill valve

The auxiliary auto refill is controlled by magnetic valve.

Air regulator

This device is used to regulate air pressure, and output to all cylinders and the refill air regulator. The air pressure should not below 4.5~6.0 kg/cm^2.

Refill air regulator

This device is used to regulate the air pressure for air gun and auxiliary refill system. The air pressure should be reach 1 kg/cm^2.

Water pressure regulator

This device is used to regulate the water inlet pressure for water auto refill valve. The water pressure should be adjusted below 1 kg/cm^2.

Water auto refill valve

This device is used for refilling water.

Air gun

This device is used for priming the tube of auxiliary.

Auxiliary dispense cylinder control valve

This device is used to control the cylinder that moves auxiliary dispensing head to front, middle and back position.

Tray push in cylinder control valve

This device is used to control the cylinder that moves the tray push bar to auxiliary, balance and back position.

Auxiliary calibrate cylinder control valve

This device is used to control the cylinder that moves auxiliary dispensing head to back and calibrate position.

Tray up/down cylinder control valve

This device is used to control cylinder that move the tray to up and down position.

Tray push out cylinder control valve

This device is used to control the cylinder that move the outlet tray push bar to front and back position.

Terminal connecter

This device is used to connect electronic control cable and auxiliary cabinet control cable.

1-6-2-2 The Pictures of Auxiliary Cabinet

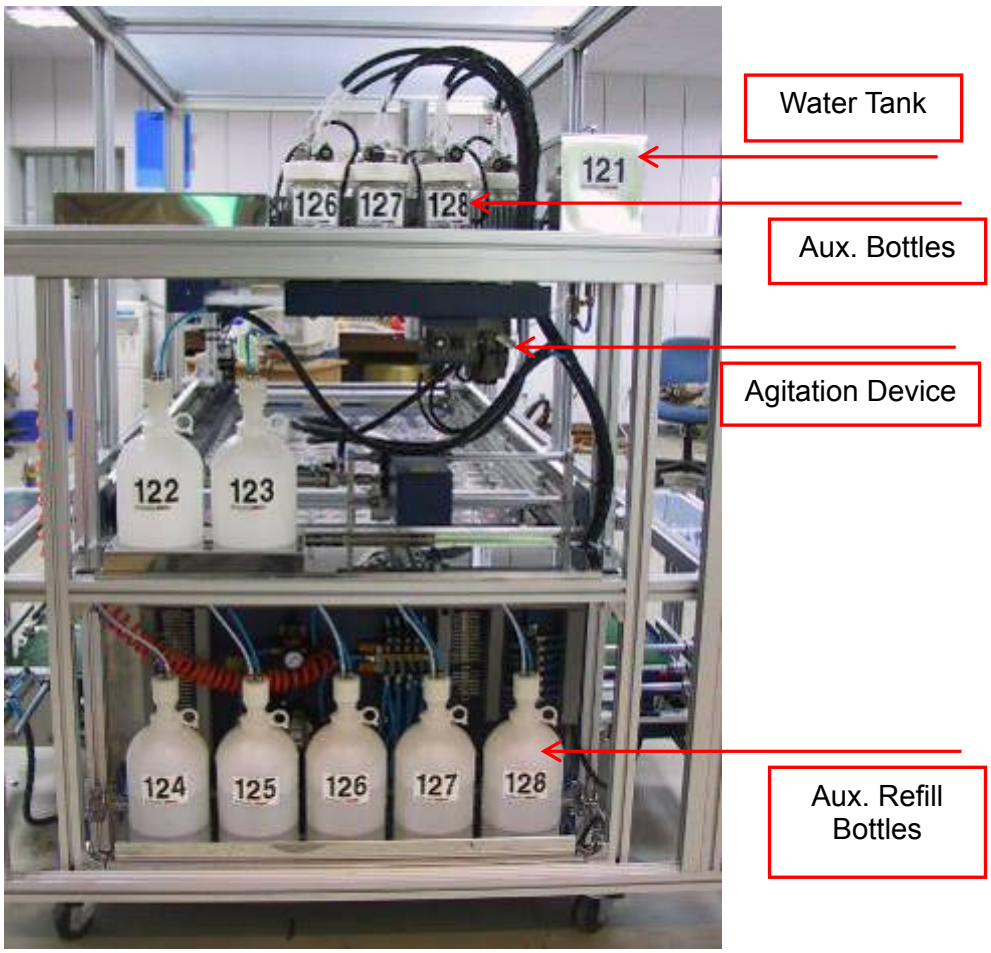

The front vision of auxiliary cabinet

Dispensing head

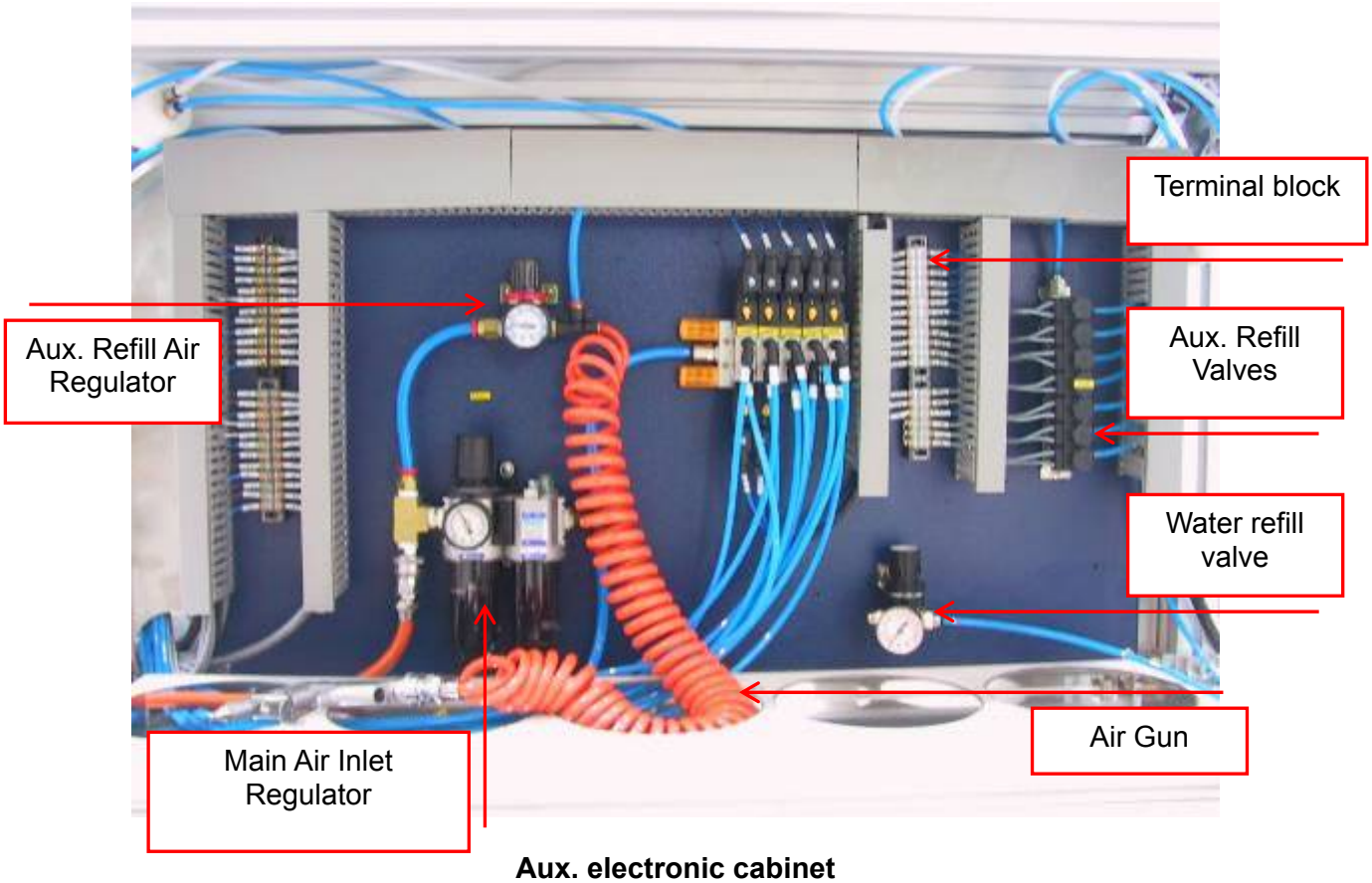

Aux. electronic cabinet

1-6-3 Conveyor

Inlet conveyor

The conveyor controls the movement of dye pot tray into dispensing position.

Container sensor

Two of approach sensors detect the type of dye pot tray. There are 4 kinds of type.

Inlet arrival sensor

One of limit sensor detects the arrival of dye pot tray.

Tray inlet push cylinder

This device is used to push the dye pot tray into balance position. After dispensed the solution, same cylinder will push the tray into second position for dispense auxiliary.

Tray up/down cylinder

This device is used to move up or down the dye pot tray on top of balance. The up or down position is detected by magnetic sensors.

Middle conveyor

The conveyor controls the movement of dye pot tray into outlet conveyor after dispensing.

Dye Pot Tray outlet positioning sensor

One limit sensor for detects the arrival of pot's container.

Container outlet push cylinder

When the outlet arrival sensor detected, the push cylinder will push the dye pot tray into the outlet conveyor.

Outlet conveyor

This device is used to outlet the dye pot tray.

1-6-3-1 Pictures of Conveyor

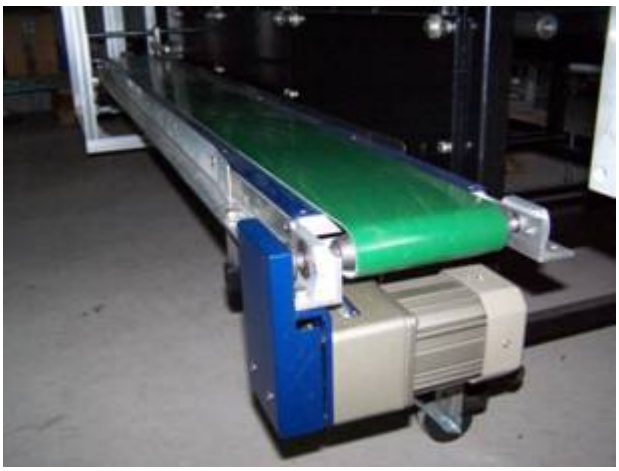

Inlet conveyor

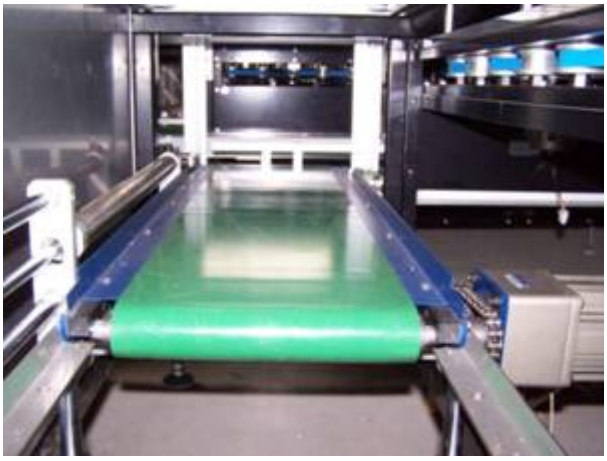

Middle conveyor

Outlet conveyor

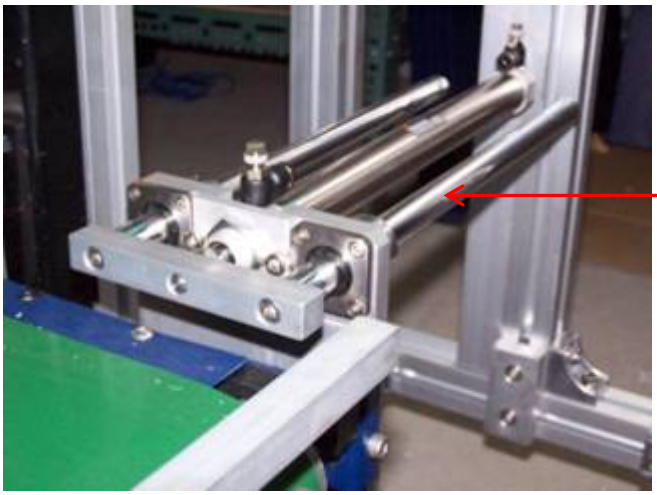

Dye Pot Tray inlet Air cylinder

Dye Pot Tray Outlet Air cylinder

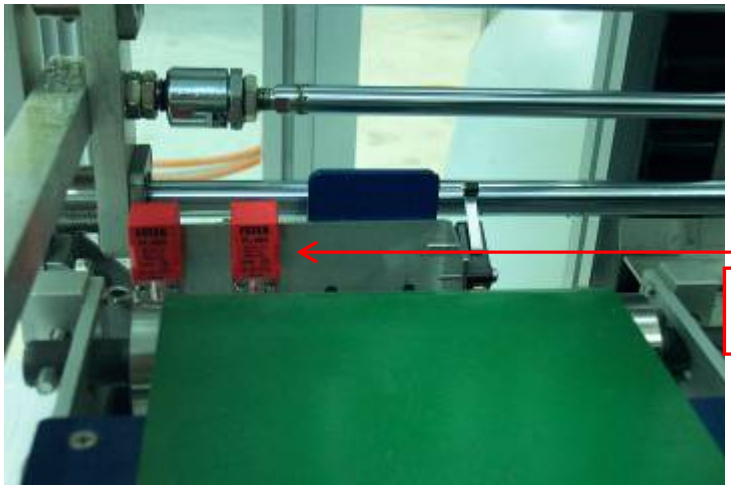

Dye Pot Tray Positioning Sensors

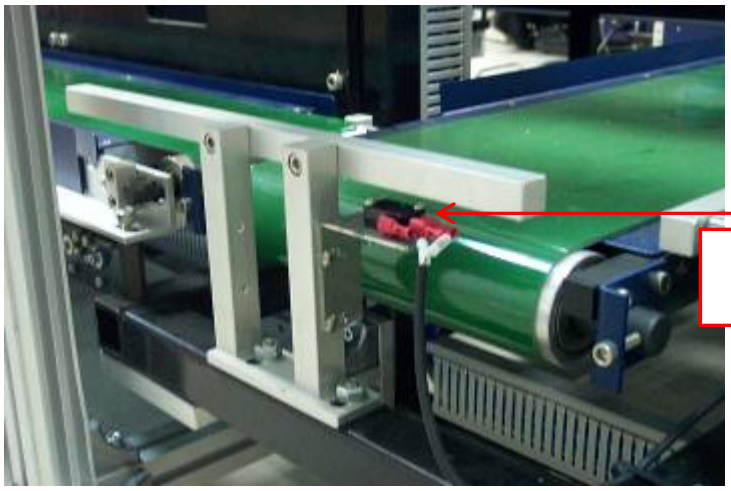

Dye Pot Tray outlet positioning sensor

Chapter 2: Hardware

2-1 System Flowchart

2-1-1 AutoLab TF 40/80/120/160

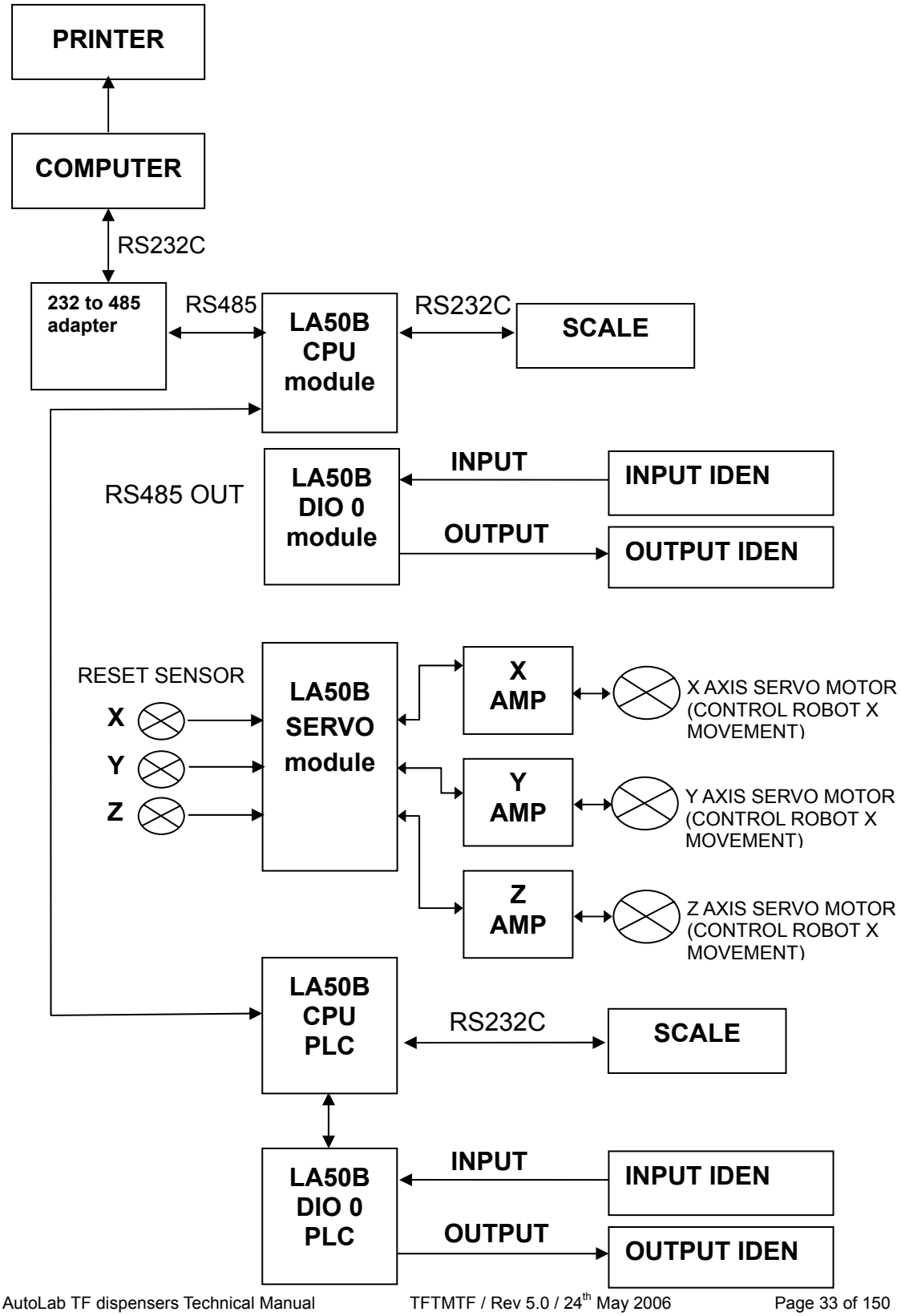

2-1-2 AutoLab TFC 88/128/168

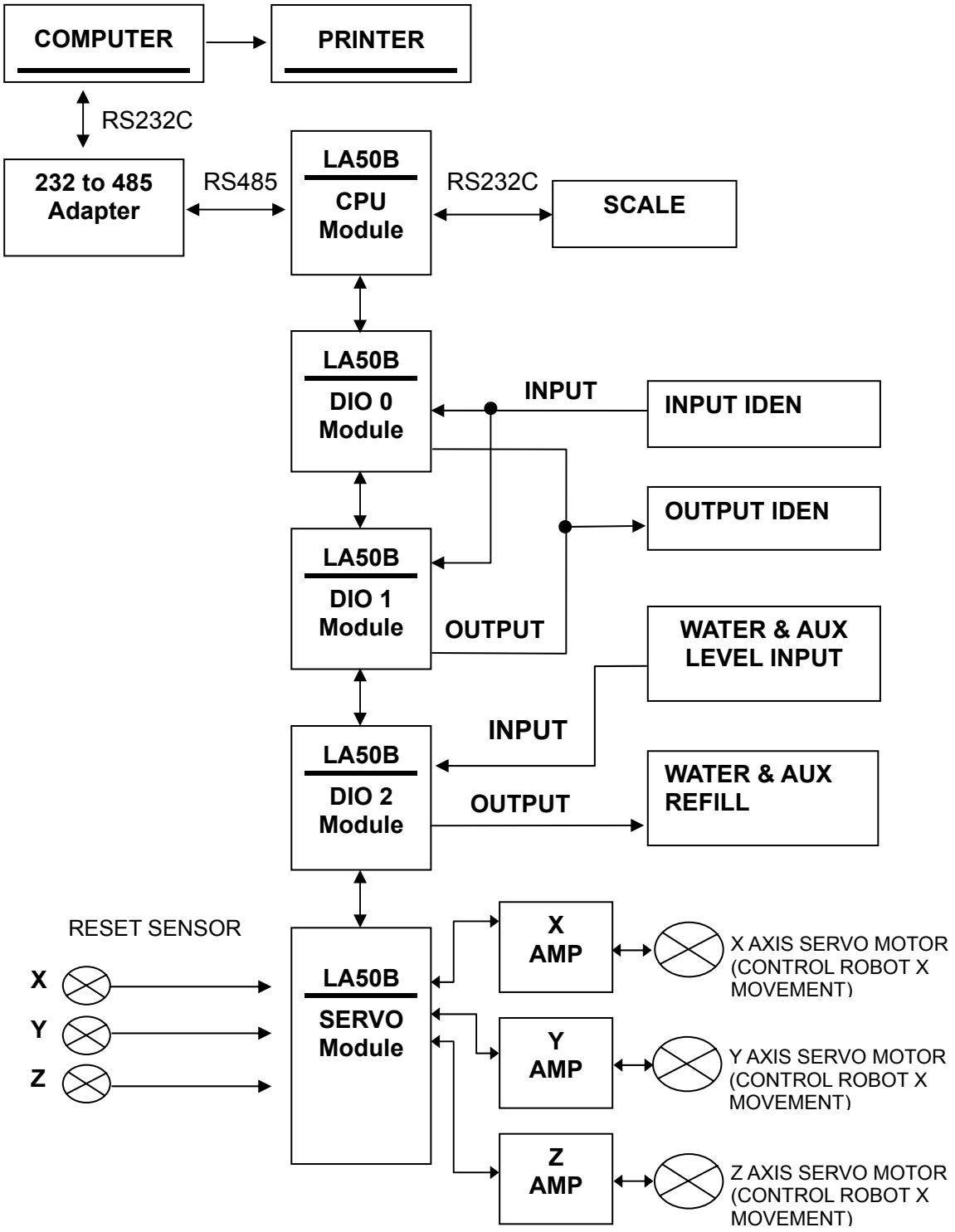

2-2 Electronic Cabinet

2-2-1 Control Panel

Main power switch
For turn on/off the main power source.

The button "ON"
For turn on the DC of the system, it will light if the DC is on.

The button "OFF"
For turn off the DC of the system, it will light if the DC is off.

Emergency stop
For stop all actions of AutoLab TF immediately. If you want to turn on AutoLab TF again, you have to turn clockwise to release the knob.

Alarm
This device will be alarm to indicate error occurred on machine.

Agitation switch
"A" section is on the left and others are "B" and "C" sections in sequence.

Agitation speed controller
Turning it can change the speed of individual agitation.

2-2-2 Picture of Control Panel

2-2-3 Electronic Cabinet

DC POWER 4.5A

LA50B CPU Module
This device has two functions. One is process input signal and then transmits to PC. The other is transform the input data to digital signal and send it out.

LA50B SERVO module
Control the Servo Motor

LA50B D.I.O. Module
Digital signal input and output

DC power supply
AC220V input, DC+24V and GND output.

Breaker
The main circuit breaker.

Magnetic contactor
This device is used for power supply of Servo Amplifier. It is controlled by button “ON”.

Power relay
This device controls the power of LA50B PLC and magnetic contactor.

Fuse boxes
3A fuse box.

SSR
There are 3 SSR and they controlled by LA50B CPU for inlet, middle and outlet conveyor. You can only find SSR in the electric cabinet on TFC systems. They are not use on TF systems

Terminator
This device is used for electronic connecter.

Cooling fan
AC220V, 1□, cool the electronic cabinet.

RS232C cable plug
This device is used to connect RS232C cable.

Power plug
This device is used to connect the power cable.

Filter
This device is used to filter amplitude frequency response curve.

2-2-4 Front View Of Electronic Cabinet

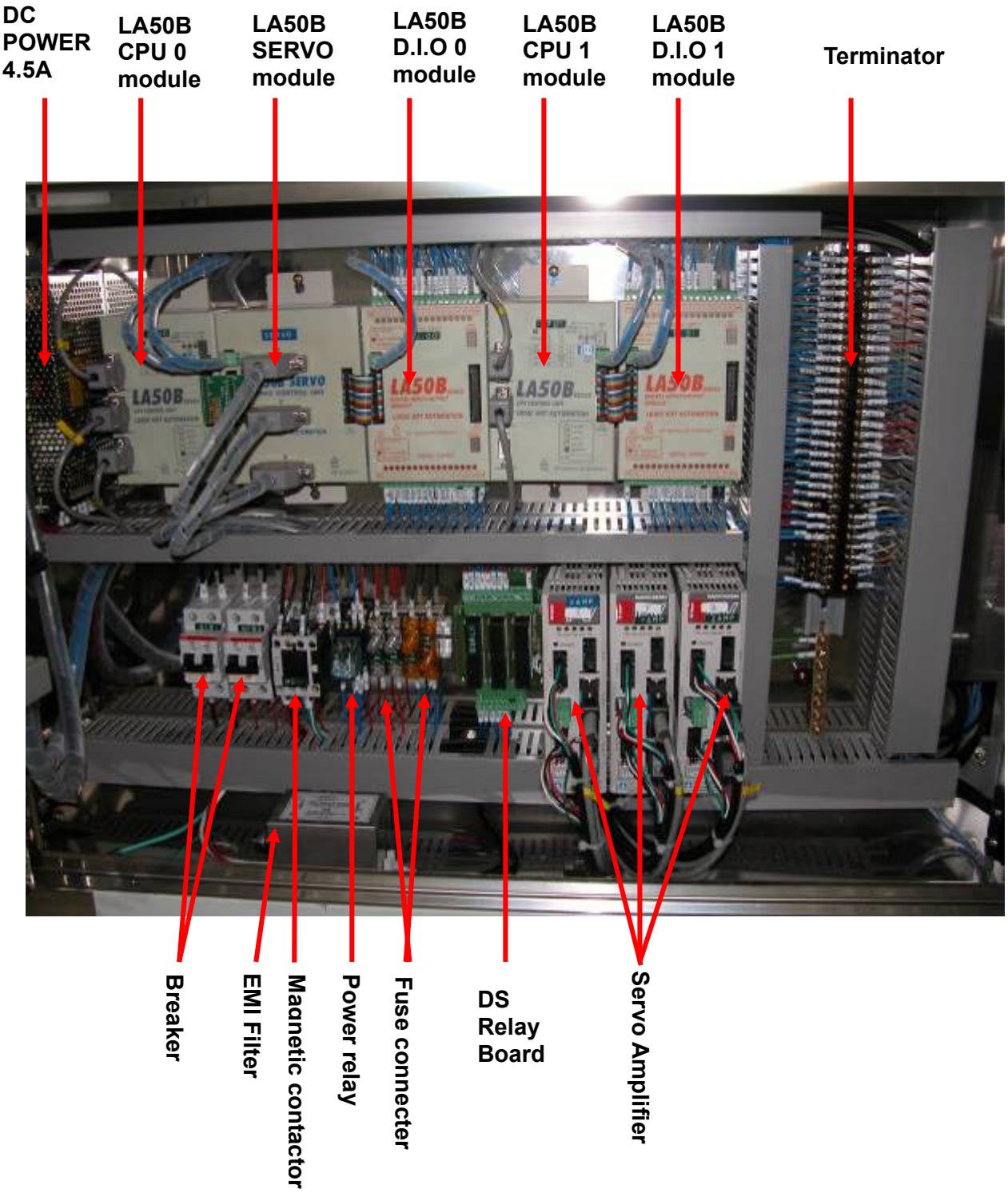

2-2-5 Side View Of Electronic Cabinet

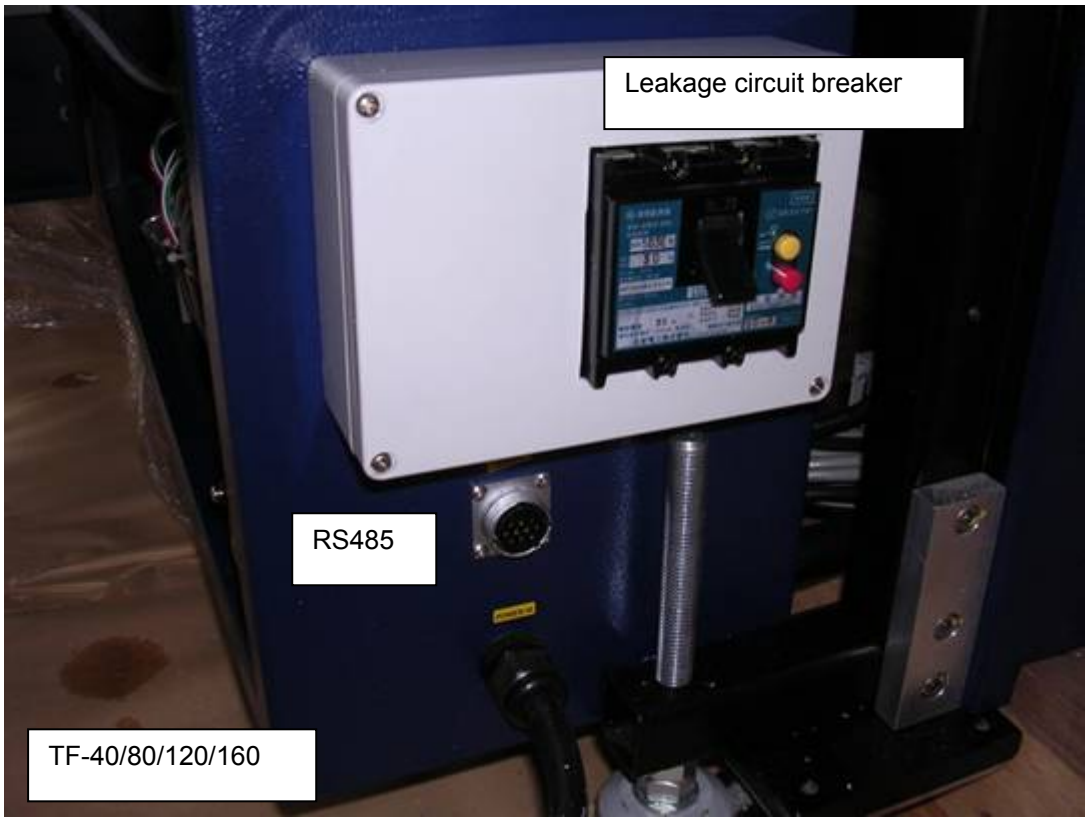

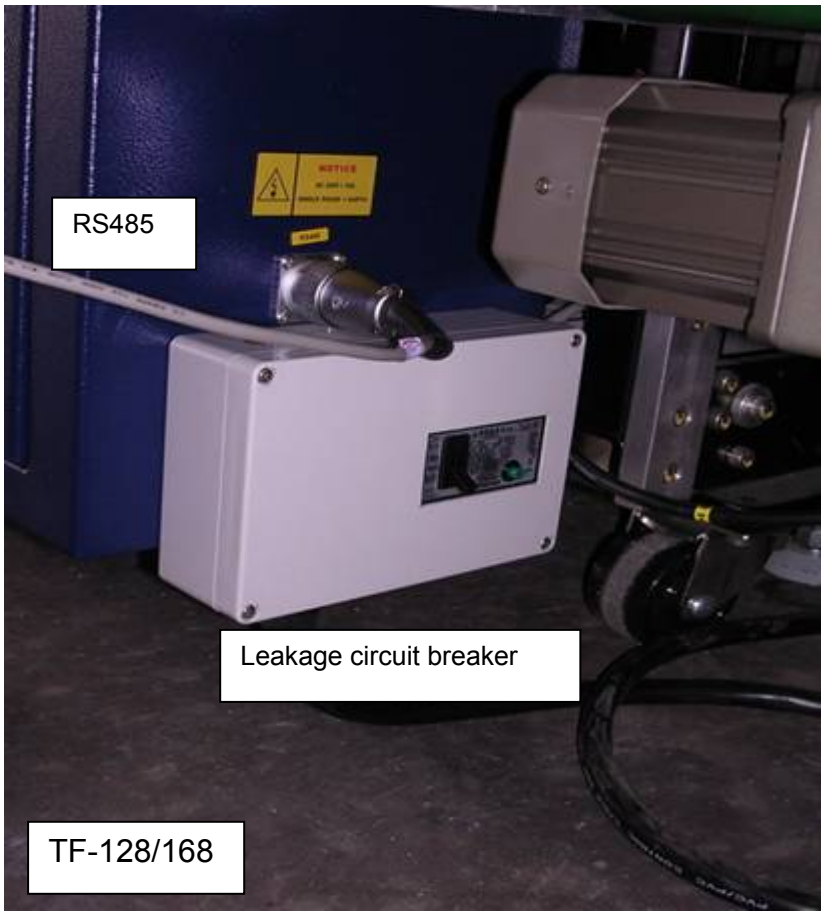

2-2-6 Front View Of New Electronic Cabinet (After TF-0042 order)

The shipment after order number TF-0042, change the interlock from leakage circuit breaker to CE separate main power switch. Please compare the different between below and previous picture of electronic cabinet.

2-2-7 LA 50B CPU Module

LA50B CPU Module is the central processing unit of PLC system. There are AutoLab TF Hardware Control Program and system parameter in the memory of LA50B CPU. The actions of AutoLab TF are controlled by computer which with PLC system and control program.

MAIN UNIT:

RS232 INPUT
Receive the signal from balance

RS485 INPUT
Connect to RS422 out of 232 to 485 Adapters

RS485 OUTPUT
N/A

ON LINE
Show that the LA50B CPU module is connecting with host computer now. It must be lighted in normal.

ERROR
Show that the module detected error.

RUN
Show that the program of module is running. It must be lighted in normal.

DIP SW
This device is used to set ID address and write protect. Normal is 1, 4 ON and 2, 3 OFF.

CPU ID
Show the address of this module. Normal is 1.

DC 24V INPUT
Power input

BUS OUTPUT
Connect to lower module

Note:

1. There are two versions of LA50B CPU for AutoLab TF and SPS systems. Please refer to below pictures to show the different between the two. From the outer appearance there is a yellow label "LA600" on original LA50B CPU. And the newer CPU has a label "600+N2" on it
2. All shipments delivered after the date August 23rd 2004 use the new design CPU module. The new design CPU has no difference in functionality, just improved design.
3. The part numbers of CPUs are as follows:

TF-0022-0502	LA50B CPU (600) used for TF-40/80/120/160.
TF-0022-0503	LA50B CPU (600) used for TF-88/128/168.
TF-0022-0504	LA50B CPU (600) used for SPS.
TF-0022-1502	LA50B CPU (600+N2) used for TF-40/80/120/160.
TF-0022-1503	LA50B CPU (600+N2) used for TF-88/128/168.
TF-0022-1504	LA50B CPU (600+N2) used for SPS.

Inner layout of original LA50B CPU (LA600)

Inner layout of new LA50B CPU (600+N2)

Outer appearance of original LA50B CPU

Outer appearance of new LA50B CPU

2-2-8 LA 50B D.I.O (PNP) Module

LA50B D.I.O (PNP) module controls all digital signal input/output of AutoLab TF. There are two parts of this module. Top is digital input (green light) and below is digital output (red light). The digital input is used to detect the situation of signal input units. For example, the position of the cylinder, Magnetic Sensor, container type detect, limit switch, approach sensor and level sensor. The digital output is controlled by transistor. There are advantages of high speed switch, no wasting etc.

DIGITAL INPUT
Connect the input point

DIGITAL OUTPUT
Connect the output point

DC 24V INPUT
Power input

BUS INPUT
Connect the upper module

BUS OUTPUT
Connect the lower module

INPUT CHANNEL
Show the ID of this module. Normally the input ID and output Id are the same.

OUTPUT CHANNEL
Show the ID of this module. Normally the input ID and output Id are the same.

2-2-9 LA 50B SERVO module

LA50B Servo module receives the commands from LA50B CPU module and controls the movement of dispensing robot. There are two functions. One is pulse output and the other is encoder input. The accurate control of servo system is accomplished by these functions.

DC24V INPUT
Power input

BUS INPUT
Connect the upper module

BUS OUTPUT
Connect the lower module

X
Connect the control line of the X servo amplifier. This device connects between the PLC module and X servo amplifier.

Y
Connect the control line of the Y servo amplifier. This device connects between the PLC module and Y servo amplifier.

Z
Connect the control line of the Z servo amplifier. This device connects between the PLC module and Z servo amplifier.

2-2-10 232 to 485 Adapter

232 to 485 adapter is a signal transform module. The device is used to transform the RS232 signal to RS485 signal for LA50B CPU module.

DC24V INPUT
Supply power to the

CN1 (RS232 INPUT)
Connect to the COM port of PC

RS485 OUTPUT
Connect to the RS485 input port of LA50B CPU module

PWR LED
Power LED.

TXD LED
Lights up when data is transferring.

RXD LED
Lights up when data is receiving.

If the 232 to 485 adaptor is powerless, only RXD light on adaptor will flash and PWR and TXD light will be off.

2-2-11 AutoLab TF DS Relay Board

The DS Relay Board is used to control the three independent agitation controllers from the command of computer. With this device, we can use software to control the time interval and clockwise/anti-clockwise of agitations. The input port is connected to LA50B DIO module and under its instruction.

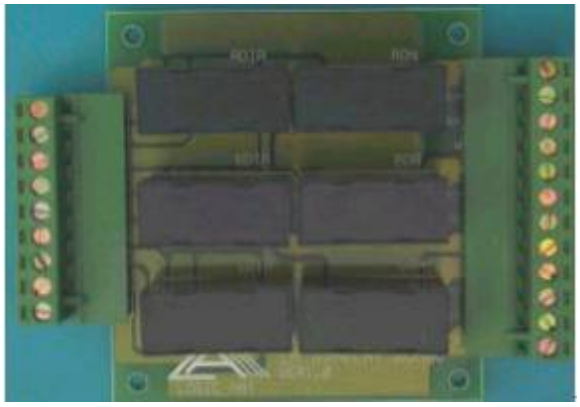

2-3 Input/Output Description

2-3-1 AutoLab TF-40 Input Definitions

WIRE NO.	INPUT BIT NO. OF LA50B DIO	DESCRIPTION	TYPE OF SENSOR	EXPLAINATION AutoLab TF-40
100	0 / 0 DIO0	Dispense head UP position sensor.	Magnetic	Dispense head is on up position and is ready for moving downward.
101	1 / 0 DIO0	Dispense head DOWN position sensor.	Magnetic	Dispense head is on down and grabbing injector.
102	2 / 0 DIO0	Dye pot tray UP position sensor.	Magnetic	Dye pot tray is moved out and is on the top of scale.
103	3 / 0 DIO0	Dye pot tray DOWN position sensor.	Magnetic	Dye pot is on scale and ready for weighing.
104	4 / 0 DIO0	Inlet cylinder scale sensor	Magnetic	When sensors works, inlet cylinder is on scale and dye pot moves on the scale and ready weighing.
105	5 / 0 DIO0	Anti-drip plate sensor	Magnetic	Anti-drip plate is on back position.
106	6 / 0 DIO0	Front sensor of air cylinder for water dispensing head	Magnetic	Water dispenses head above the dye pots No. 2, 4 and 6.
107	7 / 0 DIO0	Middle sensor of air cylinder for water dispensing head	Magnetic	Water dispenses head above the dye pots No. 1, 3 and 5.
108	8 / 0 DIO0	Back sensor of air cylinder for water dispensing head	Magnetic	Water dispenses head is on back position.
109	9 / 0 DIO0	Dye pot type identification sensor1	Approach	1. Both no sensing, dye pot A. 2. Only sensor 1 sensing, dye pot B. 3. Only sensor 2 sensing, dye pot C. 4. Both sensing, dye pot D.
110	10 / 0 DIO0	Dye pot type identification sensor2	Approach	
111	11 / 0 DIO0	Injector sensor	Infra-Red	Will be activated when injector is grabbed.
113	13 / 0 DIO0	Confirm button	Push Button	When dye pots are placed, please pushes the button to start dispense.
114	14 / 0 DIO0	Sensors for safety doors.	Magnetic	There are 8 sensors for safety doors. If any of the doors opens, robot will be stopped.
X	SERVO PLC	X axis reset sensor	Approach	Home position of X axis.
Y	SERVO PLC	Y axis reset sensor	Approach	Home position of Y axis.
Z	SERVO PLC	Z axis reset sensor	Approach	Home position of Z axis.

2-3-2 AutoLab TF-40 Output Definitions

WIRE NO.	OUTPUT BIT NO. OF LA50B DIO	DESCRIPTION	CONTROL DEVICE	EXPLAINATION AutoLab TF-40
000	0 / 0 DIO0	Grab hand	Air valve	Grabbing Injectors.
001	1 / 0 DIO0	Dispense head up/down	Air valve	Moving dispense head up/down.
002	2 / 0 DIO0	Anti-drip plate	Air valve	Moving anti-drip plate in/out.
003	3 / 0 DIO0	Tray up/down	Air valve	Moving dye pot adapter up/down.
004	4 / 0 DIO0	A zone Inlet	Air valve	Inlet dye pot to scale or Aux. position.
005	5 / 0 DIO0	A zone Aux. dispense head A	Air valve	Moving water dispenses head to front, middle, back position.
006	6 / 0 DIO0	A zone Aux. dispense head B	Air valve	Moving water dispenses head to front, middle, back position.
007	7 / 0 DIO0	Agitation switch	DS Relay Board	Switch the agitation on/off.
008	8 / 0 DIO0	Agitation direction	DS Relay Board	Control the direction of agitation (clockwise/anti-clockwise).
009	9 / 0 DIO0	Water dispense valve A	Water valve	Open/close water dispensing valve A.
010	10 / 0 DIO0	Water dispense valve B	Water valve	Open/close water dispensing valve B.
011	11 / 0 DIO0	Water dispense valve C	Water valve	Open/close water dispensing valve C.
013	13 / 0 DIO0	ACK confirm button	Push Button	Push the button when to start dispensing, and it flash in dispensing
014	14 / 0 DIO0	Alarm	Alarm	Alarm。

2-3-3 AutoLab TF-80 Input Definitions

WIRE NO.	INPUT BIT NO. OF LA50B DIO	DESCRIPTION	TYPE OF SENSOR	EXPLAINATION AutoLab TF-80
100	0 / 0 DIO0	Dispense head UP position sensor.	Magnetic	Dispense head is on up position and is ready for moving downward.
101	1 / 0 DIO0	Dispense head DOWN position sensor.	Magnetic	Dispense head is on down and grabbing injector.
102	2 / 0 DIO0	A zone. Dye pot tray UP position sensor.	Magnetic	Dye pot tray is moved out and is on the top of scale.
103	3 / 0 DIO0	A zone Dye pot tray DOWN position sensor.	Magnetic	Dye pot is on scale and ready for weighing.
104	4 / 0 DIO0	A zone- Inlet cylinder Scale sensor	Magnetic	When sensors works, inlet cylinder is on scale and dye pot moves on the scale and ready weighing.
105	5 / 0 DIO0	Anti-drip plate sensor	Magnetic	Anti-drip plate is on back position.
106	6 / 0 DIO0	A zone Front sensor of air cylinder for water dispensing head.	Magnetic	Water dispenses head above the dye pots No. 2, 4 and 6.
107	7 / 0 DIO0	A zone Middle sensor of air cylinder for water dispensing head.	Magnetic	Water dispenses head above the dye pots No. 1, 3 and 5.
108	8 / 0 DIO0	A zone Back sensor of air cylinder for water dispensing head.	Magnetic	Water dispenses head is on back position.
109	9 / 0 DIO0	A zone Dye pot type identification sensor1	Approach	1. Both no sensing, dye pot A. 2. Only sensor 1 sensing, dye pot B. 3. Only sensor 2 sensing, dye pot C. 4. Both sensing, dye pot D.
110	10 / 0 DIO0	A zone Dye pot type identification sensor2	Approach	
111	11 / 0 DIO0	Injector sensor	Infra-Red	Will be activated when injector is grabbed.
113	13 / 0 DIO0	A zone Confirm button	Push Button	When dye pots are placed, please pushes the button to start dispense.
114	14 / 0 DIO0	Sensors for safety doors.	Magnetic	There are 12 sensors for safety doors. If any of the doors opens, robot will be stopped.
118	2 / 1 DIO1	B zone Dye pot tray UP position sensor.	Magnetic	Dye pot tray is moved out and is on the top of scale.
119	3 / 1 DIO1	B zone Dye pot tray DOWN position sensor.	Magnetic	Dye pot is on scale and ready for weighing.
120	4 / 1 DIO1	B zone Inlet cylinder Scale sensor	Magnetic	When sensors works, inlet cylinder is on scale and dye pot moves on the scale and ready weighing.
122	6 / 1 DIO1	B zone Front sensor of air cylinder for water dispensing head.	Magnetic	Water dispenses head above the dye pots No. 2, 4 and 6.

WIRE NO.	INPUT BIT NO. OF LA50B DIO	DESCRIPTION	TYPE OF SENSOR	EXPLAINATION AutoLab TF-80
123	7 / 1 DIO1	B zone Middle sensor of air cylinder for water dispensing head.	Magnetic	Water dispenses head above the dye pots No. 1, 3 and 5.
124	8 / 1 DIO1	B zone Back sensor of air cylinder for water dispensing head.	Magnetic	Water dispenses head is on back position.
125	9 / 1 DIO1	B zone Dye pot type identification sensor1	Magnetic	1. Both no sensing, dye pot A. 2. Only sensor 1 sensing, dye pot B. 3. Only sensor 2 sensing, dye pot C. 4. Both sensing, dye pot D.
126	10 / 1 DIO1	B zone Dye pot type identification sensor2	Magnetic	
129	13 / 1 DIO1	A zone Confirm button	Push Button	Push the button when to start dispensing, and it flash in dispensing

2-3-4 AutoLab TF-80 Output Definitions

WIRE NO.	OUTPUT BIT NO. OF LA50B DIO	DESCRIPTION	CONTROL DEVICE	EXPLAINATION AutoLab TF-80
000	0 / 0 DIO0	Grab hand	Air valve	Grabbing Injectors.
001	1 / 0 DIO0	Dispense head up/down	Air valve	Moving dispense head up/down.
002	2 / 0 DIO0	Anti-drip plate	Air valve	Moving anti-drip plate in/out.
003	3 / 0 DIO0	A zone Tray up/down	Air valve	Moving dye pot adapter up/down.
004	4 / 0 DIO0	A zone Inlet	Air valve	Inlet dye pot to scale or Aux. position.
005	5 / 0 DIO0	A zone aux. dispense head A	Air valve	Moving water dispenses head to front, middle, back position.
006	6 / 0 DIO0	A zone aux. dispense head B	Air valve	Moving water dispenses head to front, middle, back position.
007	7 / 0 DIO0	A zone Agitation switch	DS Relay Board	Switch the A zone agitation on/off.
008	8 / 0 DIO0	A zone Agitation direction	DS Relay Board	Control A zone agitation direction. (clockwise/anti-clockwise).
009	9 / 0 DIO0	A zone Water dispense valve A	Water valve	Open/close A zone water dispensing valve A.
010	10 / 0 DIO0	A zone Water dispense valve B	Water valve	Open/close A zone water dispensing valve B.
011	11 / 0 DIO0	A zone Water dispense valve C	Water valve	Open/close A zone water dispensing valve C.
012	12 / 0 DIO0	B zone Agitation switch	DS Relay Board	Switch the B zone agitation on/off.
013	13 / 0 DIO0	A zone ACK confirm button	Push Button	Push the button when start dispensing, and flash during dispensing
014	14 / 0 DIO0	Alarm	Alarm	Alarm。
015	15 / 0 DIO0	B zone Agitation direction	DS Relay Board	Control B zone agitation direction. (clockwise/anti-clockwise).
019	3 / 1 DIO1	B zone tray up/down	Air valve	Dye pot up/down weighing.
020	4 / 1 DIO1	B zone Inlet	Air valve	Inlet dye pot to scale or Aux. position.
021	5 / 1 DIO1	B zone aux. dispense head A	Air valve	Aux. dispenses head moves front, middle, back for Aux. dispense.
022	6 / 1 DIO1	B zone aux. dispense head B	Valve	Aux. dispenses head moves front, middle, back for Aux. dispense.
025	9 / 1 DIO1	B zone Water dispense valve A	Water valve	Control valve of B zone Aux. A.
026	10 / 1 DIO1	B zone Water dispense valve B	Water valve	Control valve of B zone Aux. B.
027	11 / 1 DIO1	B zone Water dispense valve C	Water valve	Control valve of B zone Aux. C.
029	13 / 1 DIO1	B zone ACK confirm button	Push Button	Push the button when to start dispensing, and it flash in dispensing

2-3-5 AutoLab TF-120/160 Input Definitions

WIRE NO.	INPUT BIT NO. OF LA50B DIO	DESCRIPTION	TYPE OF SENSOR	EXPLAINATION AutoLab TF-120/160
100	0 / 0 DIO0	Dispense head UP position sensor.	Magnetic	Dispense head is on up position and is ready for moving downward.
101	1 / 0 DIO0	Dispense head DOWN position sensor.	Magnetic	Dispense head is on down and grabbing injector.
102	2 / 0 DIO0	A zone. Dye pot tray UP position sensor.	Magnetic	Dye pot tray is moved out and is on the top of scale.
103	3 / 0 DIO0	A zone Dye pot tray DOWN position sensor.	Magnetic	Dye pot is on scale and ready for weighing.
104	4 / 0 DIO0	A zone- Inlet cylinder Scale sensor	Magnetic	When sensors works, inlet cylinder is on scale and dye pot moves on the scale and ready weighing.
105	5 / 0 DIO0	Anti-drip plate sensor	Magnetic	Anti-drip plate is on back position.
106	6 / 0 DIO0	A zone Front sensor of air cylinder for aux/water dispensing head.	Magnetic	Aux/Water dispenses head is above the dye pots No. 2, 4 and 6.
107	7 / 0 DIO0	A zone Middle sensor of air cylinder for aux/water dispensing head.	Magnetic	Aux/Water dispenses head is above the dye pots No. 1, 3 and 5.
108	8 / 0 DIO0	A zone Back sensor of air cylinder for aux/water dispensing head.	Magnetic	Aux/Water dispenses head is on back position.
109	9 / 0 DIO0	A zone Dye pot type identification sensor1	Approach	1. Both no sensing, dye pot A. 2. Only sensor 1 sensing, dye pot B. 3. Only sensor 2 sensing, dye pot C. 4. Both sensing, dye pot D.
110	10 / 0 DIO0	A zone Dye pot type identification sensor2	Approach	
111	11 / 0 DIO0	Injector sensor	Infra-Red	Will be activated when injector is grabbed.
113	13 / 0 DIO0	A zone Confirm button	Push Button	Push the button when to start dispensing, and it will flash in dispensing
114	14 / 0 DIO0	Sensors for safety doors.	Magnetic	There are 12 sensors for safety doors. If any of the doors opens, robot will be stopped.
118	2 / 1 DIO1	B zone Dye pot tray UP position sensor.	Magnetic	Dye pot tray is moved out and is on the top of scale.
119	3 / 1 DIO1	B zone Dye pot tray DOWN position sensor.	Magnetic	Dye pot is on scale and ready for weighing.
120	4 / 1 DIO1	B zone Inlet cylinder Scale sensor	Magnetic	When sensors works, inlet cylinder is on scale and dye pot moves on the scale and ready weighing.
122	6 / 1 DIO1	B zone Front sensor of air cylinder for water dispensing head.	Magnetic	Water dispenses head above the dye pots No. 2, 4 and 6.

WIRE NO.	INPUT BIT NO. OF LA50B DIO	DESCRIPTION	TYPE OF SENSOR	EXPLAINATION AutoLab TF-120/160
123	7 / 1 DIO1	B zone Middle sensor of air cylinder for water dispensing head.	Magnetic	Water dispenses head above the dye pots No. 1, 3 and 5.
124	8 / 1 DIO1	B zone Back sensor of air cylinder for water dispensing head.	Magnetic	Water dispenses head is on back position.
125	9 / 1 DIO1	B zone Dye pot type identification sensor1	Magnetic	1. Both no sensing, dye pot A. 2. Only sensor 1 sensing, dye pot B. 3. Only sensor 2 sensing, dye pot C. 4. Both sensing, dye pot D.
126	10 / 1 DIO1	B zone Dye pot type identification sensor2	Magnetic	
129	13 / 1 DIO1	B zone Confirm button	Push Button	Push the button when to start dispensing, and it flashing in dispensing

2-3-6 AutoLab TF-120/160 Output Definitions

WIRE NO.	OUTPUT BIT NO. OF LA50B DIO	NAME	CONTROL DEVICE	EXPLAINATION AutoLab TF-120/160
000	0 / 0 DIO0	Grab hand	Air valve	Grabbing Injectors.
001	1 / 0 DIO0	Dispense head up/down	Air valve	Moving dispense head up/down.
002	2 / 0 DIO0	Anti-drip plate	Air valve	Moving anti-drip plate in/out.
003	3 / 0 DIO0	A zone Tray up/down	Air valve	Moving dye pot adapter up/down.
004	4 / 0 DIO0	A zone Inlet	Air valve	Inlet dye pot to scale or Aux. position.
005	5 / 0 DIO0	A zone Aux. dispense head A	Valve	Aux. dispenses head moves front, middle, back for Aux. dispense.
006	6 / 0 DIO0	A zone Aux. dispense head B	Valve	Aux. dispense head moves front, middle, back for Aux. dispense.
007	7 / 0 DIO0	A zone Agitation switch	DS Relay Board	Switch the A zone agitation on/off.
008	8 / 0 DIO0	A zone Agitation direction	DS Relay Board	Control A zone agitation direction. (clockwise/anti-clockwise).
009	9 / 0 DIO0	A zone Water dispense valve A	Water valve	Open/close A zone water dispensing valve A.
010	10 / 0 DIO0	A zone Water dispense valve B	Water valve	Open/close A zone water dispensing valve B.
011	11 / 0 DIO0	A zone Water dispense valve C	Water valve	Open/close A zone water dispensing valve C.
012	12 / 0 DIO0	B zone Agitation switch	DS Relay Board	Switch the B zone agitation on/off.
013	13 / 0 DIO0	A zone ACK confirm button	Push Button	Push the button when to start dispensing, and it flash in dispensing
014	14 / 0 DIO0	Alarm	Alarm	Alarm。
015	15 / 0 DIO0	B zone Agitation direction	DS Relay Board	Control B zone agitation direction. (clockwise/anti-clockwise)
019	3 / 1 DIO1	B zone tray up/down	Air valve	Dye pot up/down weighing.
020	4 / 1 DIO1	B zone Inlet	Air valve	Inlet dye pot to scale or Aux. position.
021	5 / 1 DIO1	B zone aux. dispense head A	Air valve	Aux. dispenses head moves front, middle, back for Aux. dispense.
022	6 / 1 DIO1	B zone aux. dispense head B	Valve	Aux. dispenses head moves front, middle, back for Aux. dispense.
023	7 / 1 DIO1	C zone Agitation switch	DS Relay Board	Switch the C zone agitation on/off.
024	8 / 1 DIO1	C zone Agitation direction	DS Relay Board	Control C zone agitation direction.

WIRE NO.	OUTPUT BIT NO. OF LA50B DIO	NAME	CONTROL DEVICE	EXPLAINATION AutoLab TF-120/160
				(clockwise/anti-clockwise)
025	9 / 1 DIO1	B zone Water dispense valve A	Water valve	Control valve of B zone Aux. A.
026	10 / 1 DIO1	B zone Water dispense valve B	Water valve	Control valve of B zone Aux. B.
027	11 / 1 DIO1	B zone Water dispense valve C	Water valve	Control valve of B zone Aux. C.
029	13 / 1 DIO1	B zone ACK confirm button	Push Button	Push the button when to start dispensing, and it flash in dispensing
028	12 / 1 DIO1	D zone Agitation switch	DS Relay Board	Switch the C zone agitation on/off.
029	13 / 1 DIO1	B zone ACK confirm button	Push Button	Push the button when to start dispensing, and it flash in dispensing
031	15 / 1 DIO1	D zone Agitation direction	DS Relay Board	Control D zone agitation direction. (clockwise/anti-clockwise)

2-3-7 AutoLab TF-188/128/168 Input Definition

WIRE NO.	INPUT BIT NO. OF LA50B DIO	NAME	CONTROL DEVICE	EXPLAINATION AutoLab TF 88/128/168
100	0 OF 0 DIO0	Dye pot tray detector 1	Approach	1. If both senor off, its dye pot tray A on inlet conveyor (Default setting). 2. If dye pot tray detector 1 on only, its dye pot tray B on inlet conveyor. 3. If dye pot tray detector 2 on only, its dye pot tray C on inlet conveyor. 4. If both dye pot tray detector 1 & 2 on, it's dye pot tray D on inlet conveyor.
101	1 OF 0 DIO0	Dye pot tray detector 2	Approach	See above explanation.
108	8 OF 0 DIO0	Dye pot tray is above balance	Magnetic	This sensor detected when dye pot tray is above balance.
109	9 OF 0 DIO0	Dye pot tray is on balance	Magnetic	This sensor detected when dye pot tray is on balance and ready to weighing.
110	10 OF 0 DIO0	Dye pot tray inlet push front	Magnetic	The cylinder for push dye pot tray from inlet conveyor is in ready position. It's waiting for the dye pot tray in position.
111	11 OD 0 DIO0	Dye pot tray inlet push middle	Magnetic	The cylinder for push dye pot tray from inlet conveyor is in middle position. The dye pot tray is move to above balance and weighing.
112	12 OF 0 DIO0	Dye pot tray inlet push rear	Magnetic	The cylinder for push dye pot tray from inlet conveyor is in rear position. The conveyor is move to dispense auxiliary position.
113	13 OF 0 DIO0	Dye pot tray outlet push front	Magnetic	The cylinder for push dye pot tray from outlet conveyor is in ready position. It's waiting for the dye pot tray move to position.
114	14 OF 0 DIO0	Dye pot tray outlet push rear	Magnetic	The cylinder for push dye pot tray from inlet conveyor is in rear position. It's pushing the dye pot tray and the outlet conveyor is moving dye pot tray.
115	15 OF 0 DIO0	Injector exist	Infra-red	The sensor is detected the injector exist in grab hand.
116	0 OF 1 DIO1	Dispense robot in up	Magnetic	The dispense robot is in up position. It's ready to move robot or down to grab injector.
117	1 OF 1 DIO1	Dispense robot in down	Magnetic	The dispense robot is in down position. It's grabbing injector.
118	2 OF 1 DIO1	Anti-dripping device in front	Magnetic	The Anti-dripping device in front position when grab injector and moving robot.
119	3 OF 1 DIO1	Anti-dripping device in rear	Magnetic	The Anti-dripping device in rear position and the dispense robot is able to move down.
120	4 OF 1 DIO1	The hand grab in left	Virtual (S/W)	There is no physical sensor exist. This is a software simulation.
121	5 OF 1 DIO1	The hand grab in right	Virtual (S/W)	There is no physical sensor exist. This is a software simulation.
122	6 OF 1 DIO1	Dye pot tray inlet position	Limit	The container is reach inlet position to

WIRE NO.	INPUT BIT NO. OF LA50B DIO	NAME	CONTROL DEVICE	EXPLAINATION AutoLab TF 88/128/168
				push into weighing position.
123	7 OF 1 DIO1	Dye pot tray outlet position	Limit	The container is reach outlet position to push into exit position.
124	8 OF 1 DIO1	Auxiliary dispensing cylinder in front	Magnetic	The auxiliary dispensing head is on pot 1 & 2 positions.
125	9 OF 1 DIO1	Auxiliary dispensing cylinder in middle	Magnetic	The auxiliary dispensing head is on pot 3 & 4 positions.
126	10 OF 1 DIO1	Auxiliary dispensing cylinder in rear	Virtual (S/W)	The auxiliary dispensing head is on pot 5 & 6 positions. There is no physical sensor exist. This is a software simulation.
127	11 OF 1 DIO1	Auxiliary calibrating cylinder in left	Magnetic	The auxiliary dispensing head is on calibration position.
128	12 OF 1 DIO1	Auxiliary calibrating cylinder in right	Magnetic	The auxiliary dispensing head is off calibration position. This is the default position.
130	14 OF 1 DIO1	Dispensing room secure sensor	Magnetic	The secure sensors for dispensing room are all detected. There are totally 14 sensors in serial connection. Any one of them is open will interrupt the movement of robot for safety reason.
132	0 OF 2 DIO2	The level sensing of water	Magnetic	The sensor is detected when level in low position.
133	1 OF 2 DIO2	The level sensing of auxiliary 1	Magnetic	The sensor is detected when level in low position.
134	2 OF 2 DIO2	The level sensing of auxiliary 2	Magnetic	The sensor is detected when level in low position.
135	3 OF 2 DIO2	The level sensing of auxiliary 3	Magnetic	The sensor is detected when level in low position.
136	4 OF 2 DIO2	The level sensing of auxiliary 4	Magnetic	The sensor is detected when level in low position.
137	5 OF 2 DIO2	The level sensing of auxiliary 5	Magnetic	The sensor is detected when level in low position.
138	6 OF 2 DIO2	The level sensing of auxiliary 6	Magnetic	The sensor is detected when level in low position.
139	7 OF 2 DIO2	The level sensing of auxiliary 7	Magnetic	The sensor is detected when level in low position.
X	SERVO PLC	Reset X axis	Approach	The sensor is detected when X axis resetting.
Y	SERVO PLC	Reset Y axis	Approach	The sensor is detected when Y axis resetting.
Z	SERVO PLC	Reset Z axis	Approach	The sensor is detected when Z axis resetting.

2-3-8 AutoLab TF-188/128/168 Output Definition

WIRE NO.	OUTPUT BIT NO. OF LA50B DIO	NAME	CONTROL DEVICE	EXPLAINATION AutoLab TF 88/128/168
000	0 OF 0 DIO0	Hand grab	Cylinder	Injector grabbing.
001	1 OF 0 DIO0	Dispensing robot up/down	Cylinder	Dispensing robot move up or down.
002	2 OF 0 DIO0	Anti-dripping device	Cylinder	Anti-dripping device move front or back
003	3 OF 0 DIO0	Auxiliary dispensing head left/right	Cylinder	Auxiliary dispensing head move left or right for calibration.
004	4 OF 0 DIO0	Dye pot tray up/down	Cylinder	Container move up or down for weighing.
005	5 OF 0 DIO0	Auxiliary dispensing head A	Cylinder	Auxiliary dispensing head move front; middle or rear to dispensing auxiliary.
006	6 OF 0 DIO0	Auxiliary dispensing head B	Cylinder	Auxiliary dispensing head move front; middle or rear to dispensing auxiliary.
007	7 OF 0 DIO0	Inlet conveyor	SSR	Control the inlet conveyor's motor.
008	8 0F 0 DIO0	Middle conveyor	SSR	Control the middle conveyor's motor.
009	9 OF 0 DIO0	Outlet conveyor	SSR	Control the outlet conveyor's motor.
010	10 OF 0 DIO0	Dye pot tray moving A	Cylinder	Push the dye pot tray into solution or auxiliary dispensing position.
011	11 OF 0 DIO0	Dye pot tray moving B	Cylinder	Push the dye pot tray into solution or auxiliary dispensing position.
012	12 OF 0 DIO0	Dye pot tray push out	Cylinder	Push the dye pot tray into outlet conveyor.
013	13 OF 0 DIO0	D zone Agitation	DS Relay	Control switch of D zone Agitator..
014	14 OF 0 DIO0	D zone Agitation	DS Relay	Control A zone Agitator move forward or backward.
016	0 OF 1 DIO1	Water dispense left	Valve	Control the two dispensing valves of water.
017	1 OF 1 DIO1	Auxiliary 1 dispense left	Valve	Control the dispensing valve of auxiliary 1.
018	2 OF 1 DIO1	Auxiliary 2 dispense left	Valve	Control the dispensing valve of auxiliary 2.
019	3 OF 1 DIO1	Auxiliary 3 dispense left	Valve	Control the dispensing valve of auxiliary 3.
020	4 OF 1 DIO1	Auxiliary 4 dispense left	Valve	Control the dispensing valve of auxiliary 4.
021	5 OF 1 DIO1	Auxiliary 5 dispense left	Valve	Control the dispensing valve of auxiliary 5.
022	6 OF 1 DIO1	Auxiliary 6 dispense left	Valve	Control the dispensing valve of auxiliary 6.
023	7 OF 1 DIO1	Auxiliary 7 dispense left	Valve	Control the dispensing valve of auxiliary 7.
024	8 OF 1 DIO1	Water dispense right	Valve	Control the dispensing valves of water.
025	9 OF 1 DIO1	Auxiliary 1 dispense right	Valve	Control the dispensing valve of auxiliary 1.
026	10 OF 1 DIO1	Auxiliary 2 dispense right	Valve	Control the dispensing valve of auxiliary 2.
027	11 OF 1 DIO1	Auxiliary 3 dispense right	Valve	Control the dispensing valve of auxiliary 3.
028	12 OF 1 DIO1	Auxiliary 4 dispense right	Valve	Control the dispensing valve of auxiliary 4.
029	13 OF 1 DIO1	Auxiliary 5 dispense right	Valve	Control the dispensing valve of auxiliary 5.
030	14 OF 1 DIO1	Auxiliary 6 dispense	Valve	Control the dispensing valve of

WIRE NO.	OUTPUT BIT NO. OF LA50B DIO	NAME	CONTROL DEVICE	EXPLAINATION AutoLab TF 88/128/168
		right		auxiliary 6.
031	15 OF 1 DIO1	Auxiliary 7 dispense right	Valve	Control the dispensing valve of auxiliary 7.
033	1 OF 2 DIO2	Auxiliary 1 refill	Valve	Control the auxiliary 1 refill when low level
034	2 OF 2 DIO2	Auxiliary 2 refill	Valve	Control the auxiliary 2 refill when low level
035	3 OF 2 DIO2	Auxiliary 3 refill	Valve	Control the auxiliary 3 refill when low level
036	4 OF 2 DIO2	Auxiliary 4 refill	Valve	Control the auxiliary 4 refill when low level
037	5 OF 2 DIO2	Auxiliary 5 refill	Valve	Control the auxiliary 5 refill when low level
038	6 OF 2 DIO2	Auxiliary 6 refill	Valve	Control the auxiliary 6 refill when low level
039	7 OF 2 DIO2	Auxiliary 7 refill	Valve	Control the auxiliary 7 refill when low level
041	9 OF 2 DIO2	A zone Agitation	DS Relay	Control switch of A zone Agitator.
042	10 OF 2 DIO2	A zone Agitation	DS Relay	Control switch of A zone Agitator. move forward or backward.
043	11 OF 2 DIO2	B zone Agitation	DS Relay	Control switch of B zone Agitator.
044	12 OF 2 DIO2	B zone Agitation	DS Relay	Control switch of B zone Agitator. move forward or backward.
045	13 OF 2 DIO2	C zone Agitation	DS Relay	Control switch of C zone Agitator.
046	14 OF 2 DIO2	C zone Agitation	DS Relay	Control switch of C zone Agitator .move forward or backward.
047	15 OF 2 DIO2	Alarm	Alarm	Alarm.

2-3-9 Electronic Drawing Of AutoLab TF (40/80/120/160)

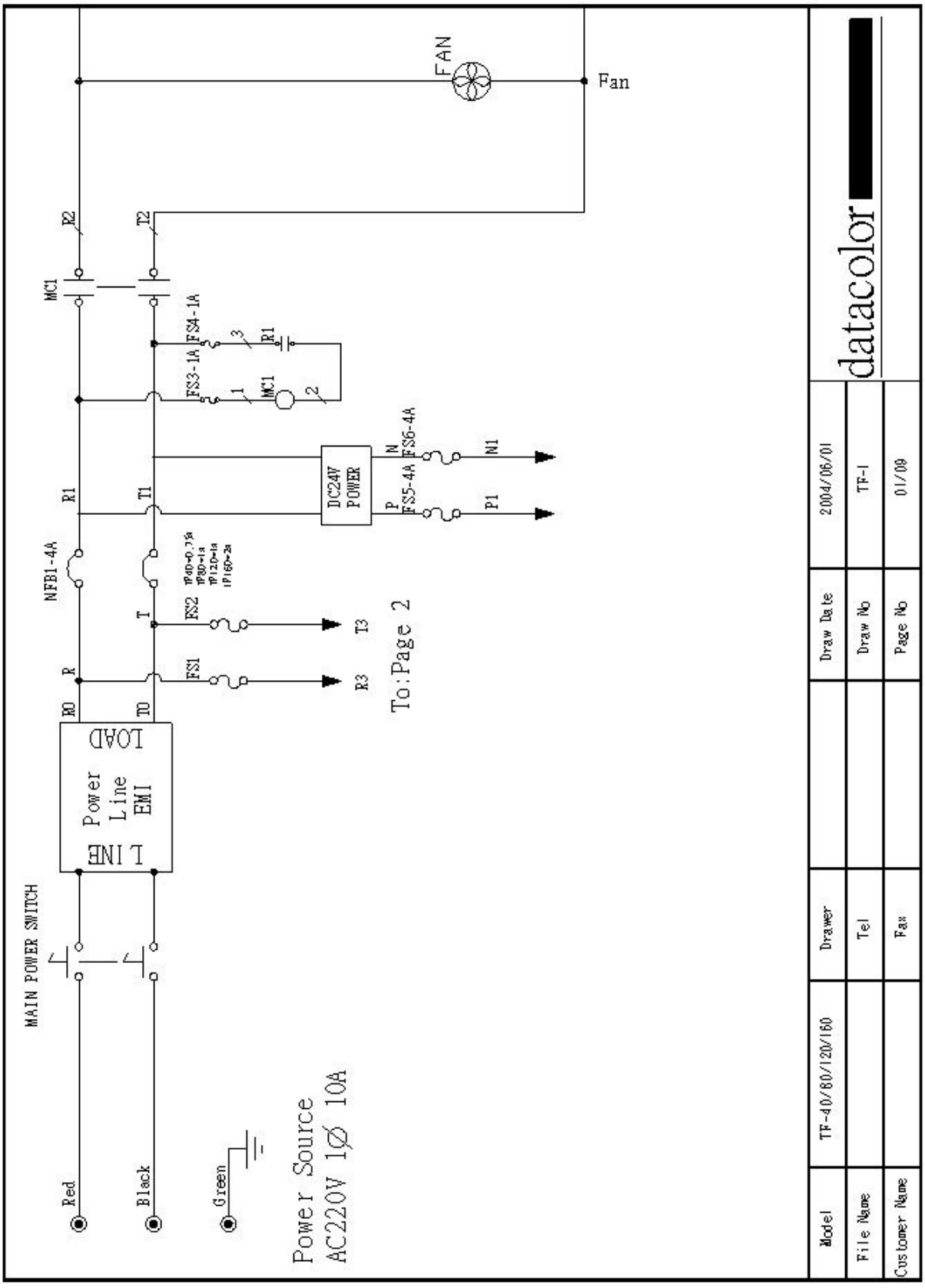

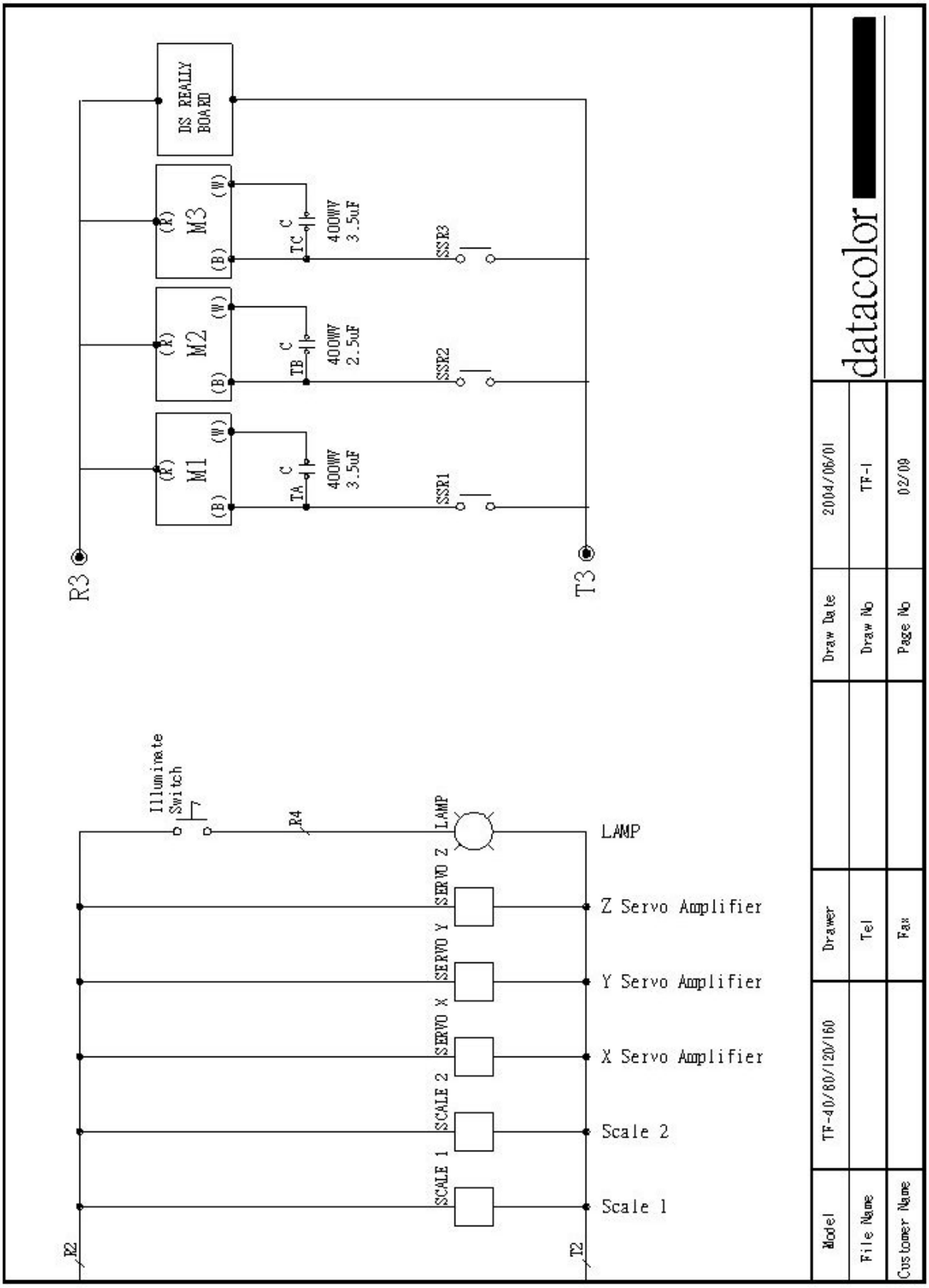
DS REALY BOARD
M3
M2
M1
(R)
(B)
(W)
TC C
TB C
TA C
400WV 3.5uF
400WV 2.5uF
400WV 3.5uF
SSR3
SSR2
SSR1
R3
T3
Illuminate Switch
R4
LAMP
SERVO Z
SERVO Y
SERVO X
SCALE 2
SCALE 1
Z Servo Amplifier
Y Servo Amplifier
X Servo Amplifier
Scale 2
Scale 1
R2
T2
dataColor
2004/06/01
TF-1
02/09
Draw Date
Draw No
Page No
Drawer
Tel
Fax
TF-40/60/120/160
Model
File Name
Customer Name

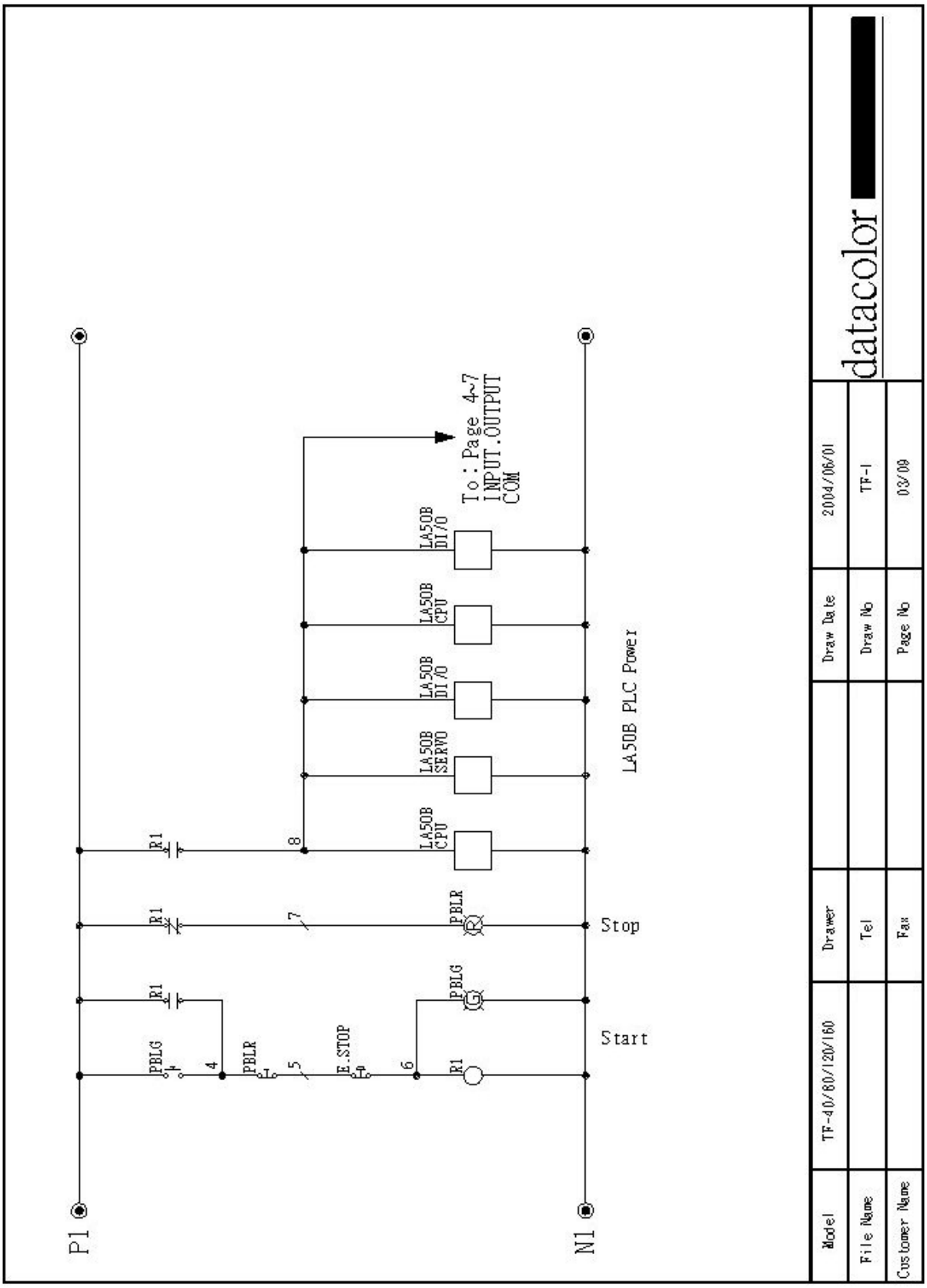
P1
N1
R1
PBLG
PBLR
E.STOP
R1
4
5
6
7
8
Start
Stop
LA50B PLC Power
LA50B CPU
LA50B SERVO
LA50B DI/O
LA50B CPU
LA50B DI/O
To : Page 4~7
INPUT.OUTPUT
COM
dataColor
2004/06/01
TF-1
03/09
Draw Date
Draw No
Page No
Drawer
Tel
Fax
TF-40/60/120/160
Model
File Name
Customer Name

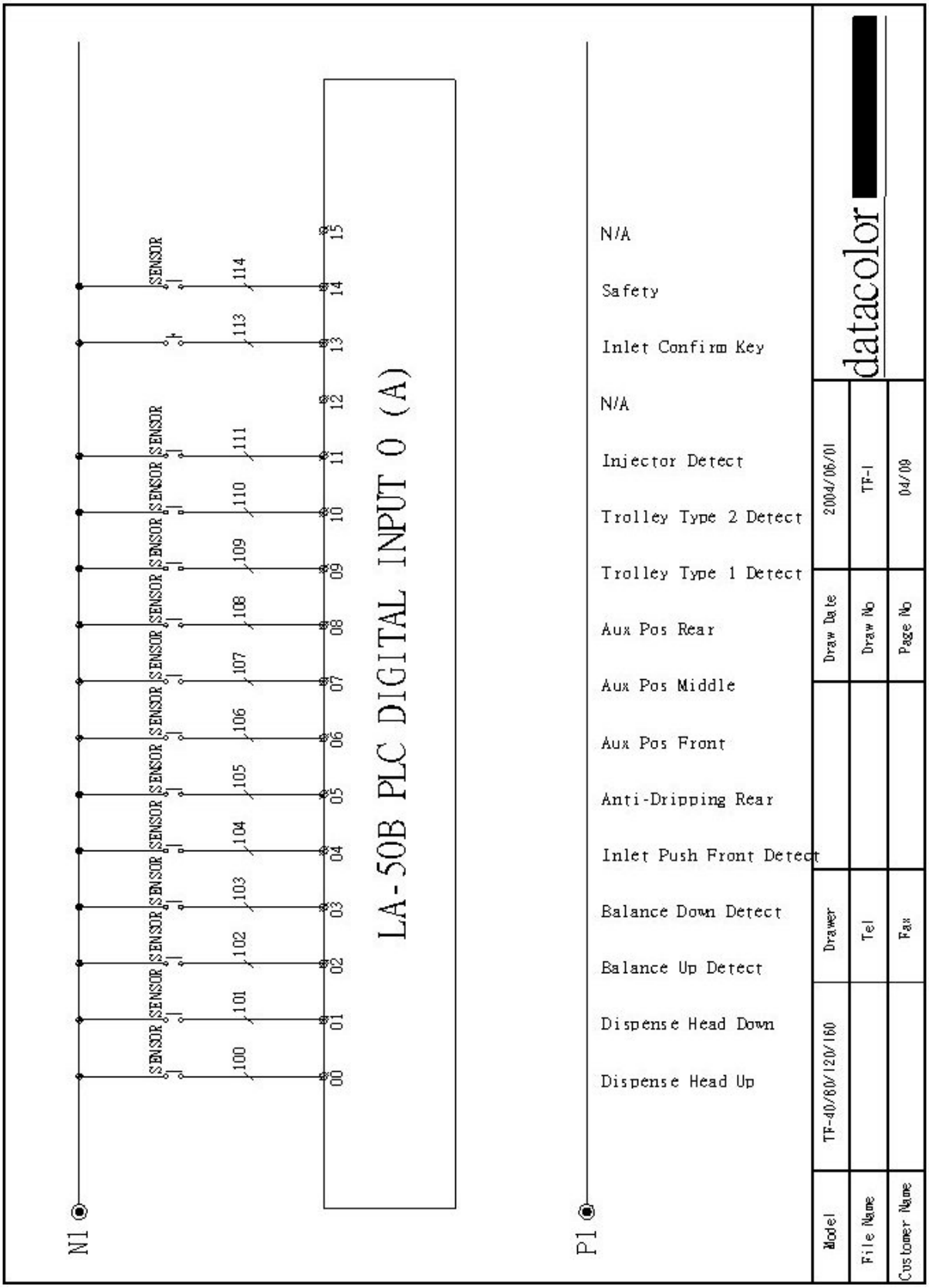
LA-50B PLC DIGITAL INPUT 0 (A)
N1
P1
SENSOR
100
101
102
103
104
105
106
107
108
109
110
111
113
114
00
01
02
03
04
05
06
07
08
09
10
11
12
13
14
15
N/A
Safety
Inlet Confirm Key
N/A
Injector Detect
Trolley Type 2 Detect
Trolley Type 1 Detect
Aux Pos Rear
Aux Pos Middle
Aux Pos Front
Anti-Dripping Rear
Inlet Push Front Detect
Balance Down Detect
Balance Up Detect
Dispense Head Down
Dispense Head Up
datacolor
Model
TF-40/60/120/160
Drawer
File Name
Tel
Customer Name
Fax
Draw Date
2004/06/01
Draw No
TF-1
Page No
04/09

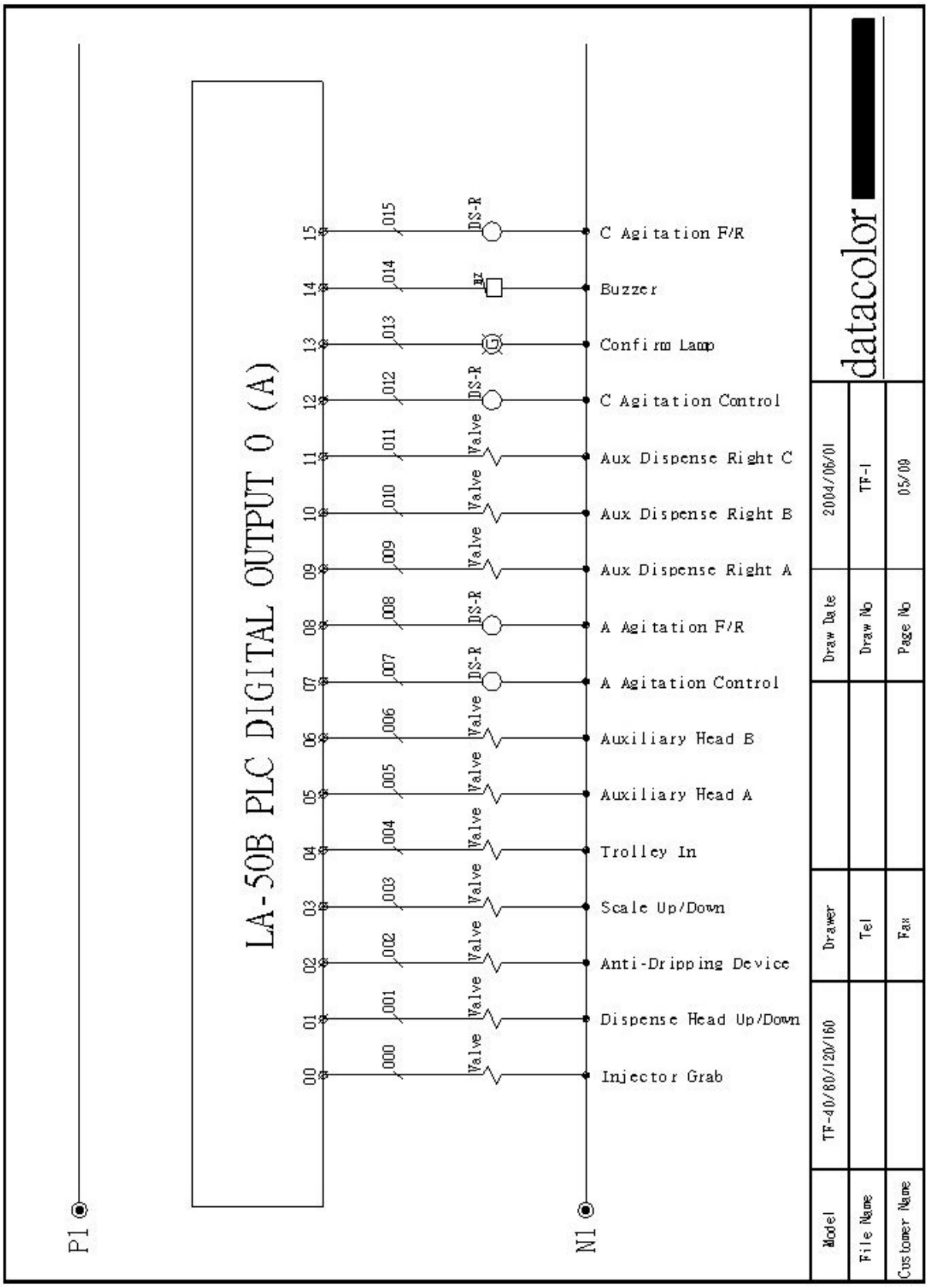
LA-50B PLC DIGITAL OUTPUT 0 (A)
P1
N1
15 015 DS-R C Agitation F/R
14 014 BZ Buzzer
13 013 G Confirm Lamp
12 012 DS-R C Agitation Control
11 011 Valve Aux Dispense Right C
10 010 Valve Aux Dispense Right B
09 009 Valve Aux Dispense Right A
08 008 DS-R A Agitation F/R
07 007 DS-R A Agitation Control
06 006 Valve Auxiliary Head B
05 005 Valve Auxiliary Head A
04 004 Valve Trolley In
03 003 Valve Scale Up/Down
02 002 Valve Anti-Dripping Device
01 001 Valve Dispense Head Up/Down
00 000 Valve Injector Grab
datacolor
Model TF-40/60/120/160
File Name
Customer Name
Drawer
Tel
Fax
Draw Date 2004/06/01
Draw No TF-1
Page No 05/09

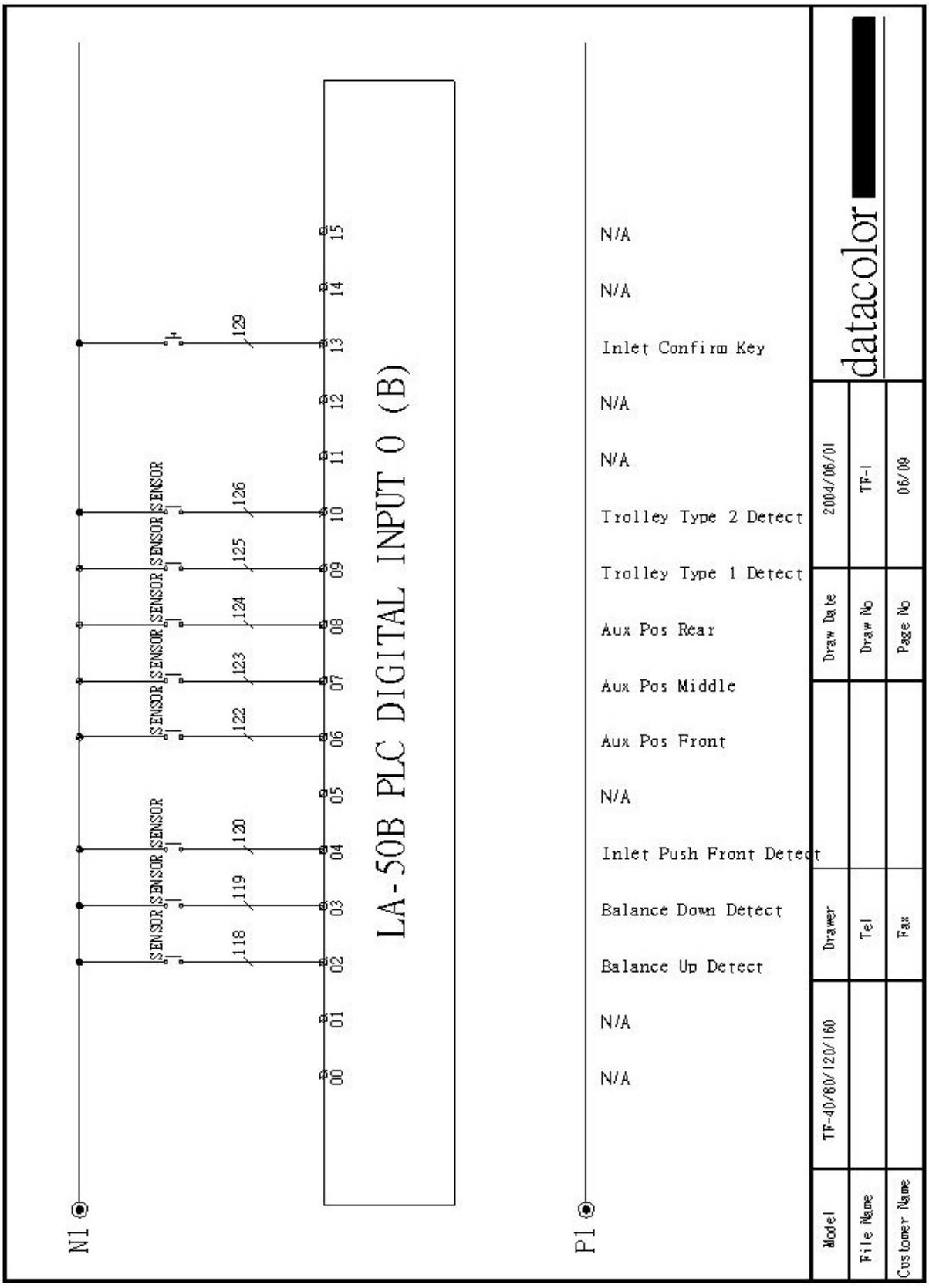
LA-50B PLC DIGITAL INPUT 0 (B)
N1
P1
SENSOR
118
119
120
122
123
124
125
126
129
00
01
02
03
04
05
06
07
08
09
10
11
12
13
14
15
N/A
N/A
Inlet Confirm Key
N/A
N/A
Trolley Type 2 Detect
Trolley Type 1 Detect
Aux Pos Rear
Aux Pos Middle
Aux Pos Front
N/A
Inlet Push Front Detect
Balance Down Detect
Balance Up Detect
N/A
N/A
Model
TF-40/80/120/160
File Name
Customer Name
Drawer
Tel
Fax
Draw Date
2004/06/01
Draw No
TF-1
Page No
06/09
datacolor

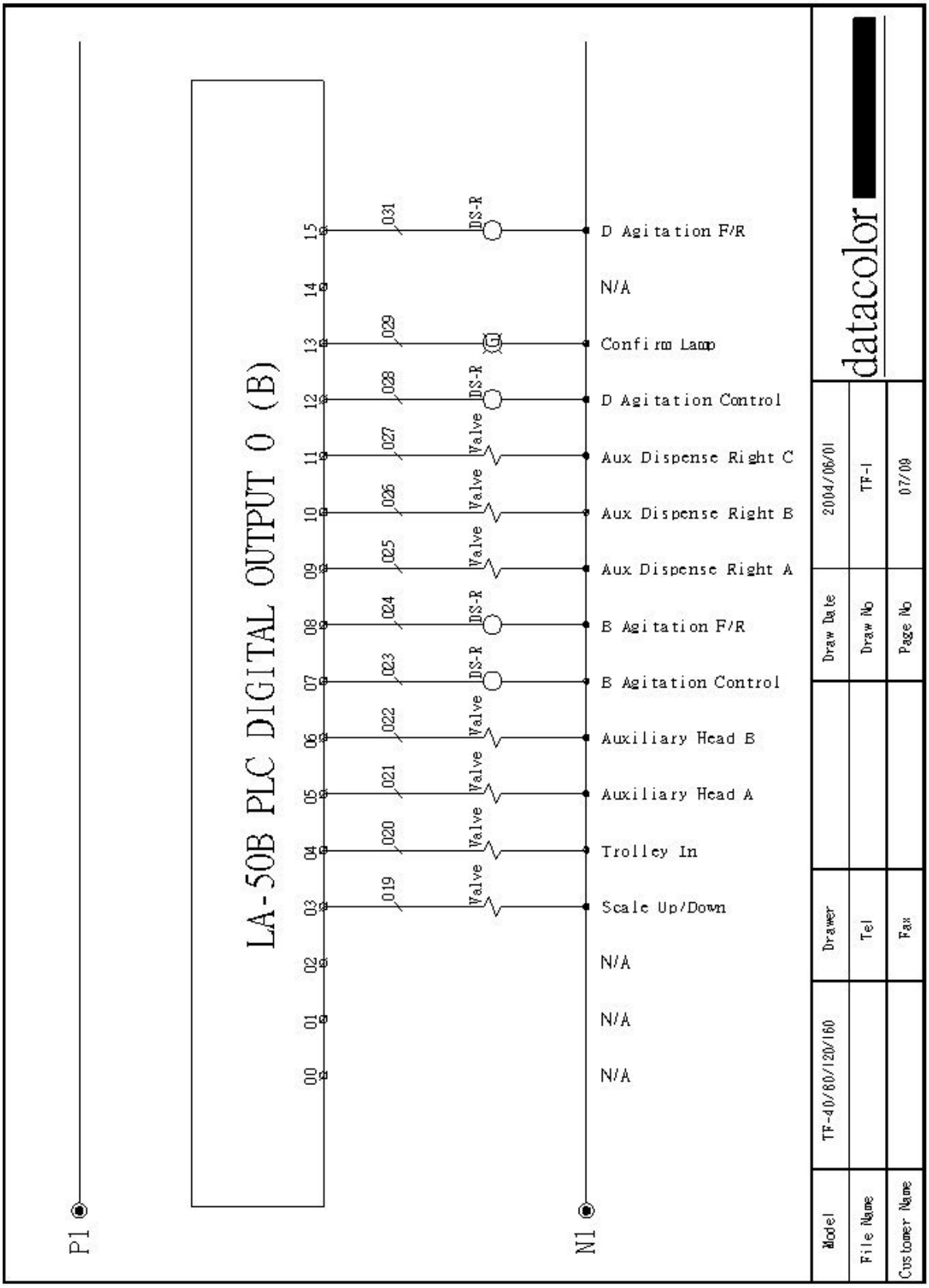
LA-50B PLC DIGITAL OUTPUT 0 (B)
P1
N1
00
01
02
03
04
05
06
07
08
09
10
11
12
13
14
15
019
020
021
022
023
024
025
026
027
028
029
031
Valve
DS-R
G
N/A
Scale Up/Down
Trolley In
Auxiliary Head A
Auxiliary Head B
B Agitation Control
B Agitation F/R
Aux Dispense Right A
Aux Dispense Right B
Aux Dispense Right C
D Agitation Control
Confirm Lamp
D Agitation F/R
datacolor
2004/06/01
TF-1
07/09
Draw Date
Draw No
Page No
Drawer
Tel
Fax
TF-40/80/120/160
Model
File Name
Customer Name

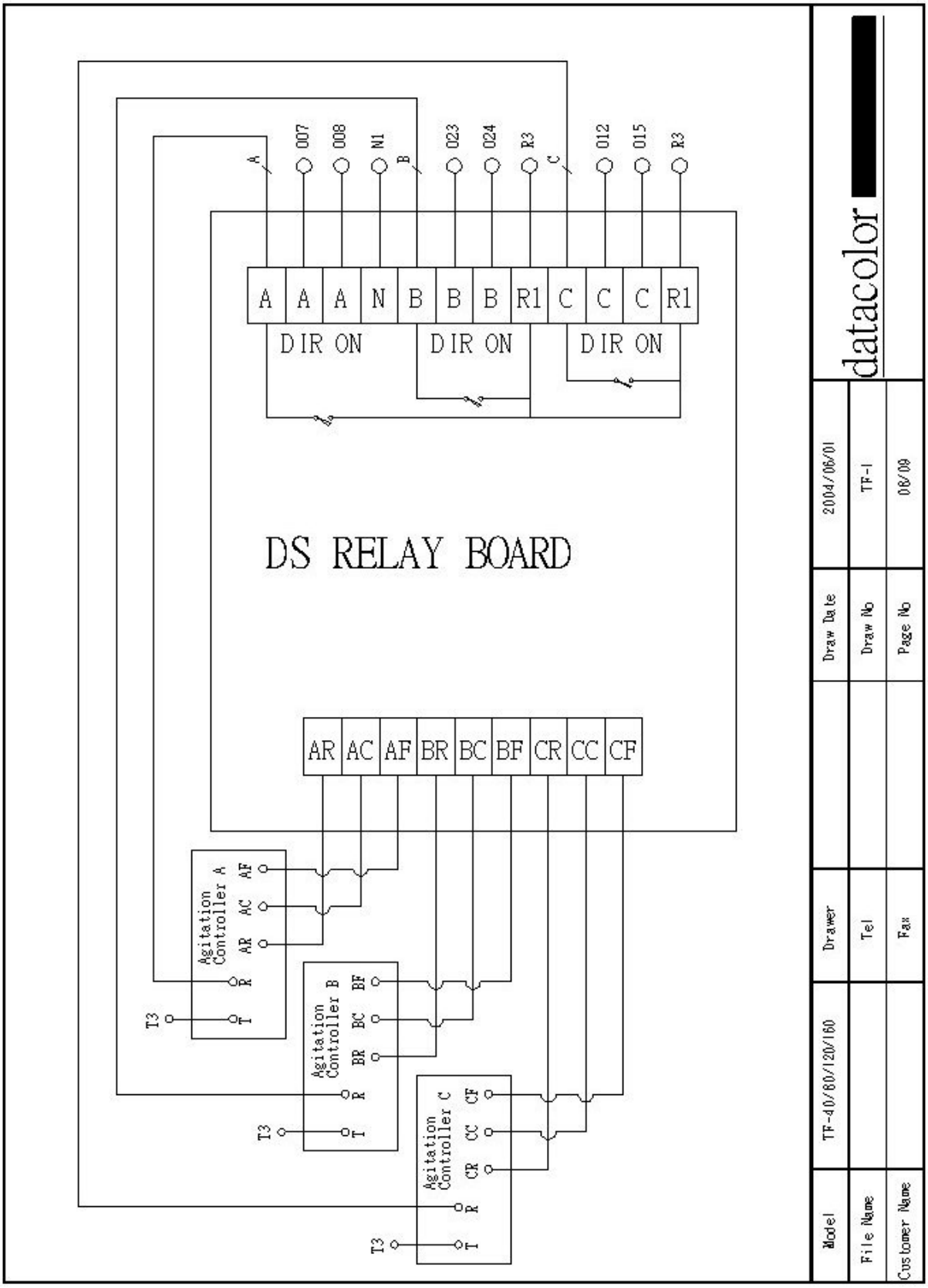
A
007
008
N1
B
023
024
R3
C
012
015
R3
A A A N B B B R1 C C C R1
DIR ON
DIR ON
DIR ON
DS RELAY BOARD
AR AC AF BR BC BF CR CC CF
Agitation Controller A
AF AC AR R T
Agitation Controller B
BF BC BR R T
Agitation Controller C
CF CC CR R T
T3
T3
T3
dataColor
2004/06/01
TF-1
08/09
Draw Date
Draw No
Page No
Drawer
Tel
Fax
Model
TF-40/80/120/160
File Name
Customer Name

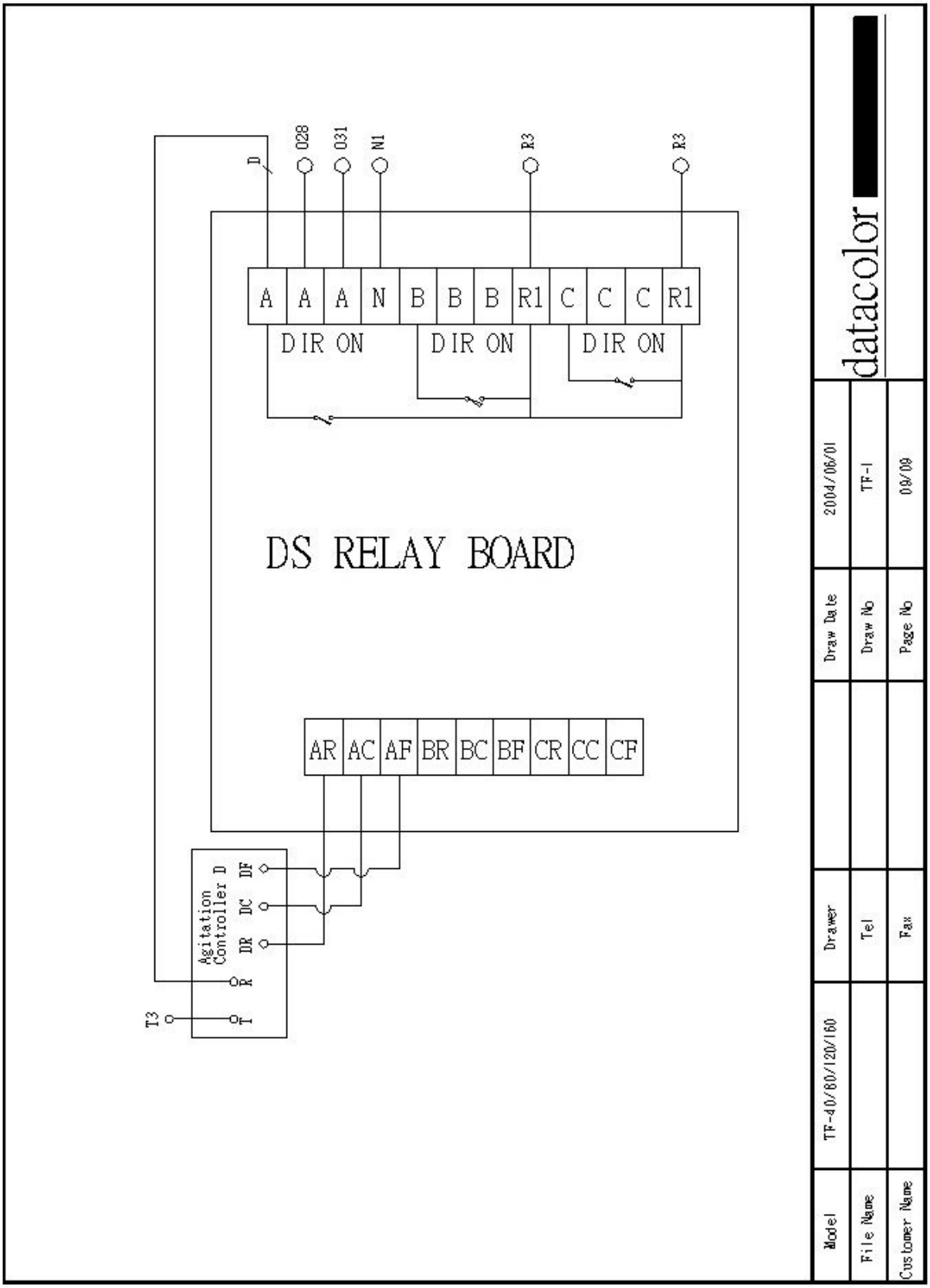
D
028
031
N1
R3
R3
A A A N B B B R1 C C C R1
DIR ON
DIR ON
DIR ON
DS RELAY BOARD
AR AC AF BR BC BF CR CC CF
Agitation Controller D
DF
DC
DR
R
T
T3
dataColor
2004/06/01
TF-1
09/09
Draw Date
Draw No
Page No
Drawer
Tel
Fax
TF-40/60/120/160
Model
File Name
Customer Name

2-3-10 Electronic Drawing of AutoLab TF (88/128/168)

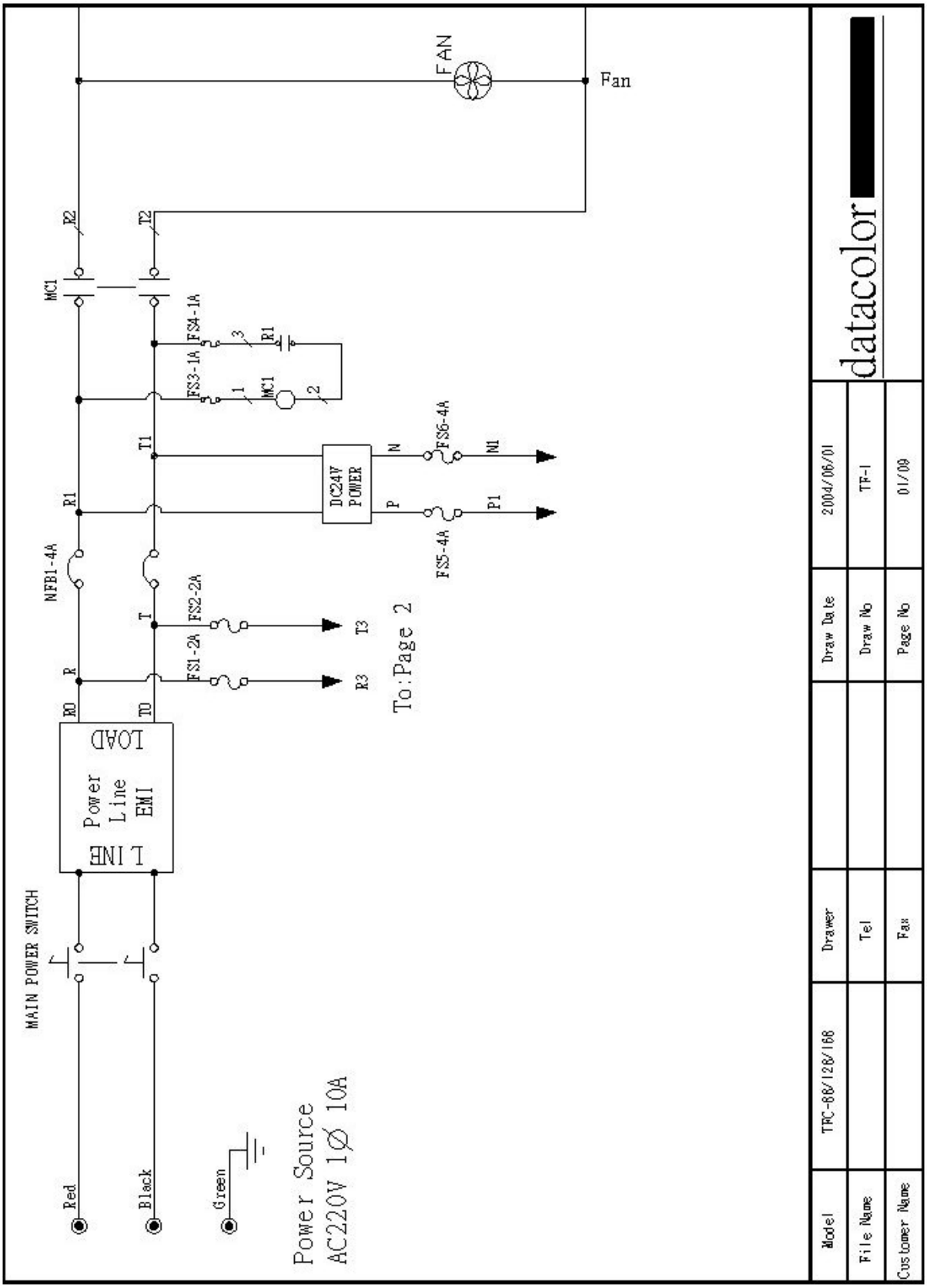

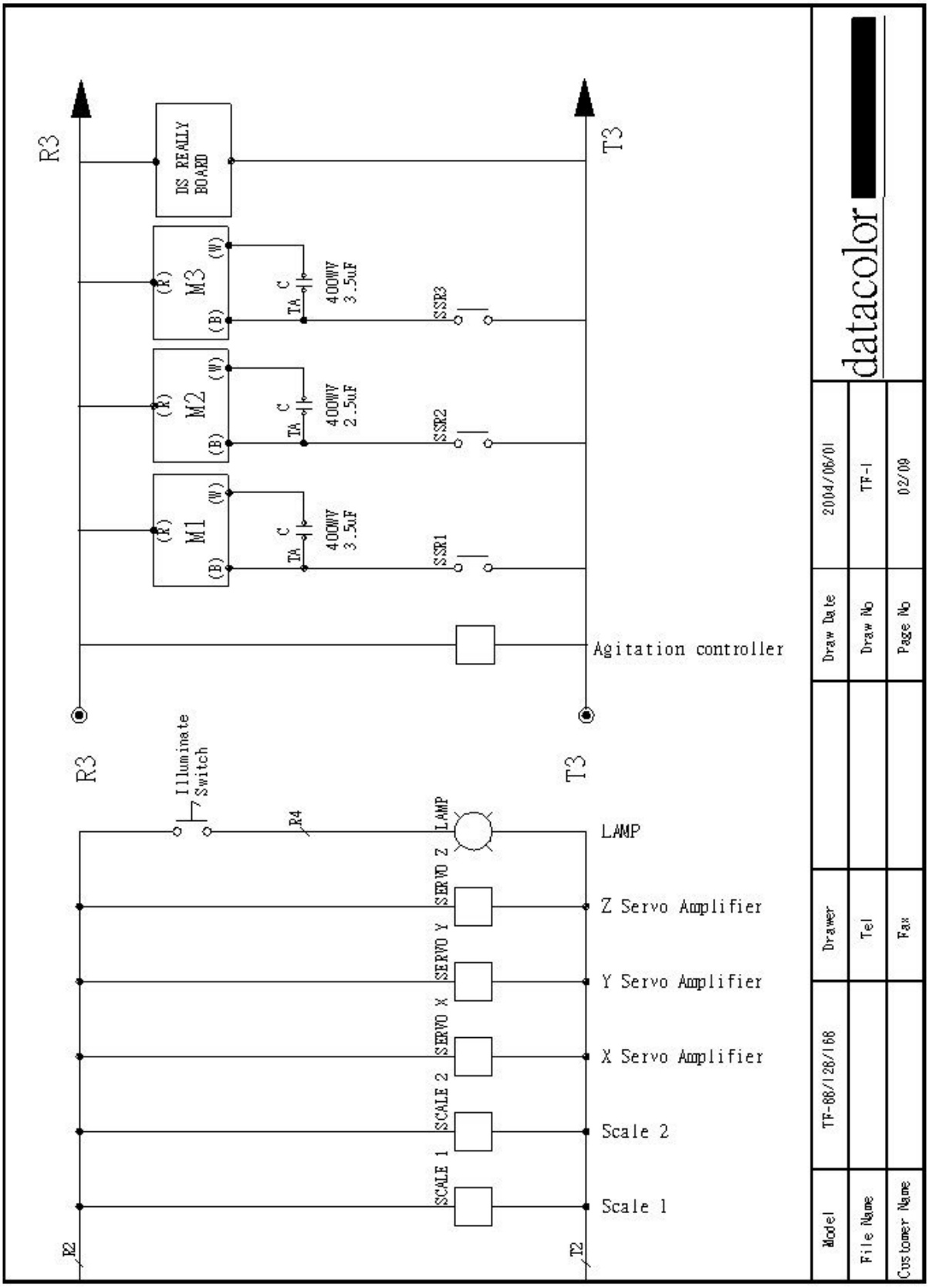
R3
DS REALLY BOARD
T3
M3
M2
M1
TA C
400WV 3.5uF
400WV 2.5uF
400WV 3.5uF
SSR3
SSR2
SSR1
Agitation controller
R3
T3
Illuminate Switch
R4
LAMP
LAMP
SERVO Z
Z Servo Amplifier
SERVO Y
Y Servo Amplifier
SERVO X
X Servo Amplifier
SCALE 2
Scale 2
SCALE 1
Scale 1
R2
T2
datacolor
2004/06/01
TF-1
02/09
Draw Date
Draw No
Page No
Drawer
Tel
Fax
TF-88/128/168
Model
File Name
Customer Name

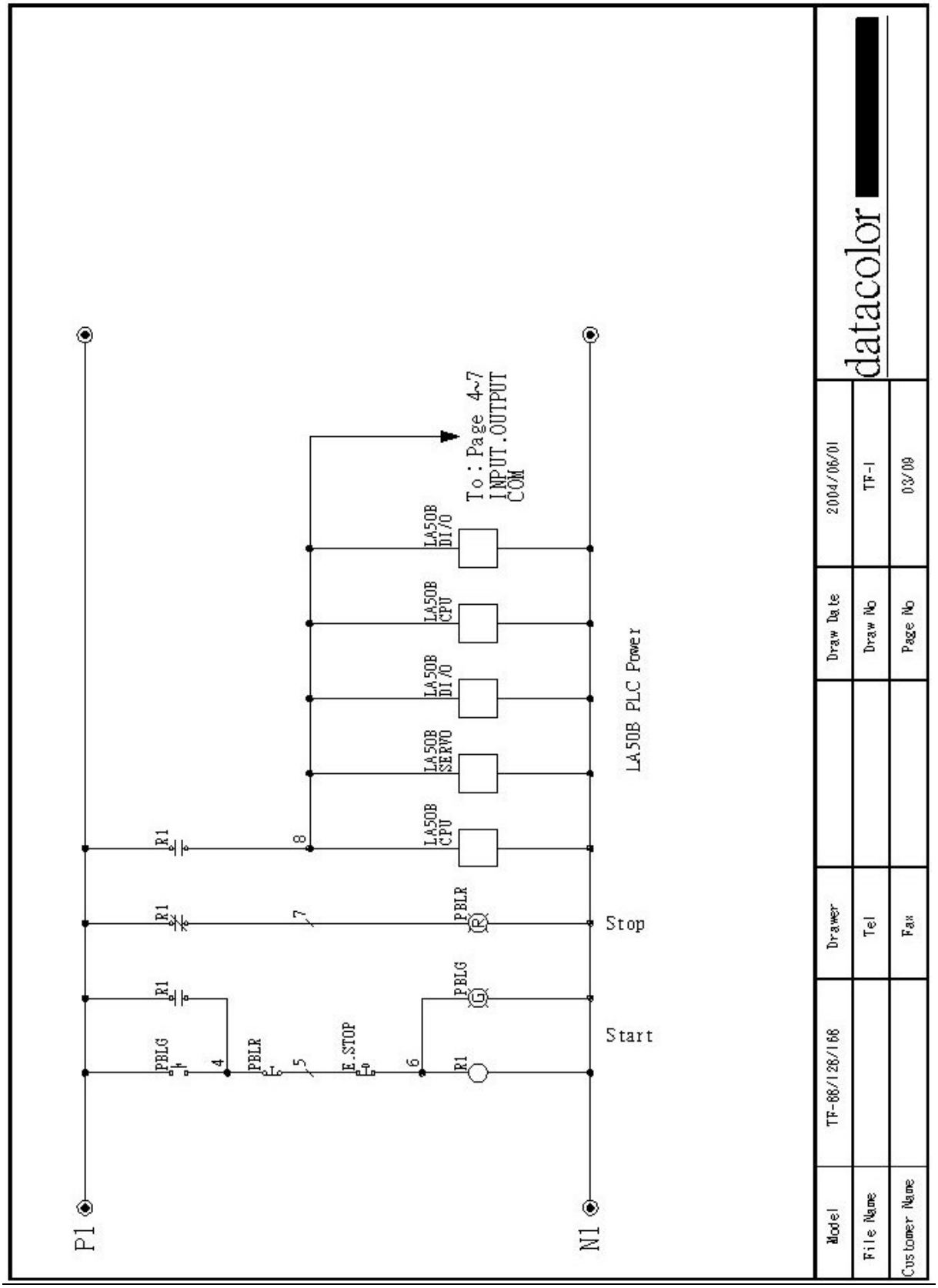
P1
N1
R1
PBLG
PBLR
E.STOP
R1
PBLG
PBLR
R1
LA50B CPU
LA50B SERVO
LA50B DI/O
LA50B CPU
LA50B DI/O
To: Page 4~7
INPUT.OUTPUT
COM
LA50B PLC Power
Stop
Start
datacolor
Model
TF-88/128/168
File Name
Customer Name
Drawer
Tel
Fax
Draw Date
2004/06/01
Draw No
TF-1
Page No
03/09

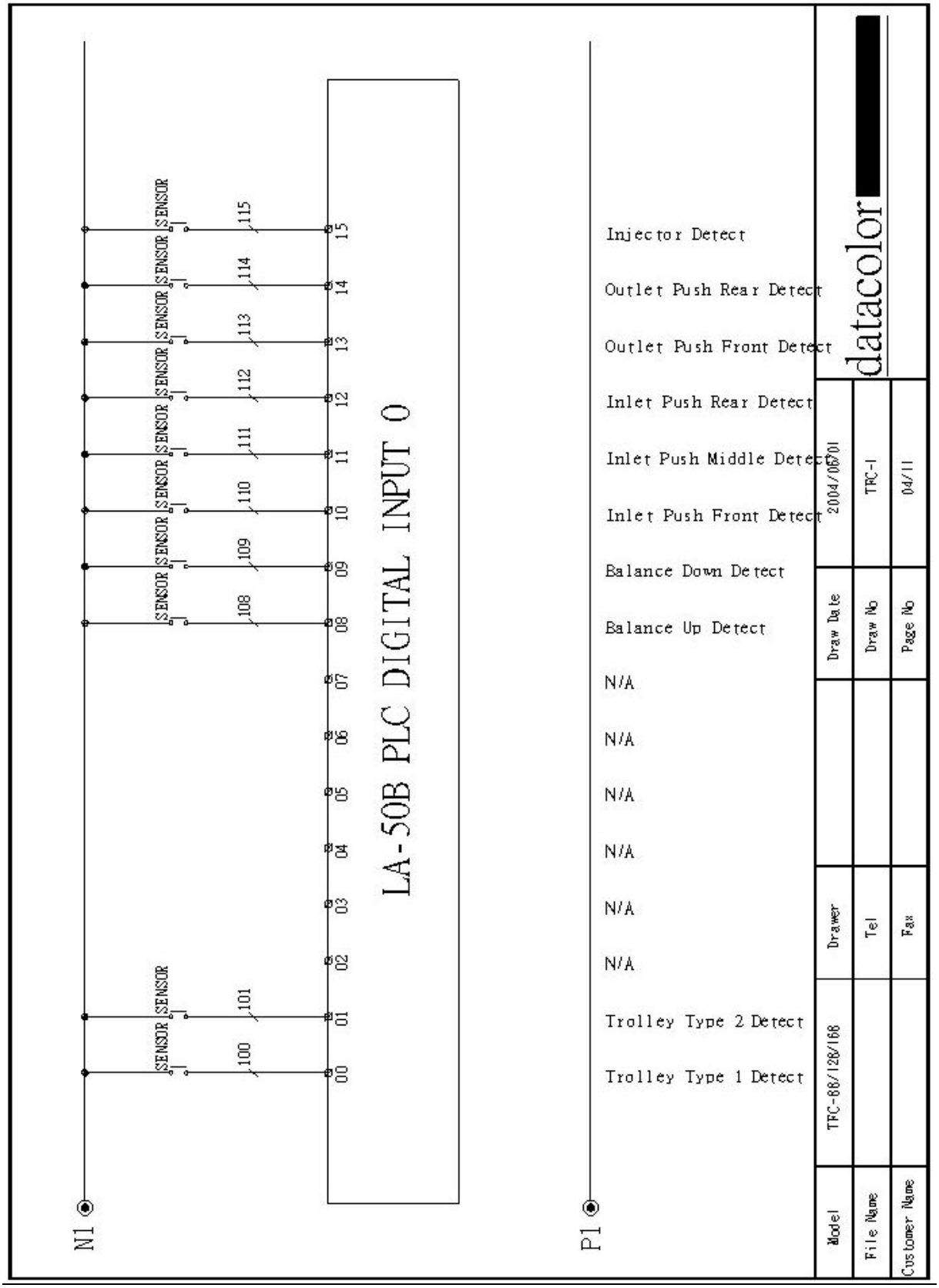
LA-50B PLC DIGITAL INPUT 0
N1
P1
SENSOR
100
101
108
109
110
111
112
113
114
115
00
01
02
03
04
05
06
07
08
09
10
11
12
13
14
15
Injector Detect
Outlet Push Rear Detect
Outlet Push Front Detect
Inlet Push Rear Detect
Inlet Push Middle Detect
Inlet Push Front Detect
Balance Down Detect
Balance Up Detect
N/A
N/A
N/A
N/A
N/A
N/A
Trolley Type 2 Detect
Trolley Type 1 Detect
datacolor
Draw Date
2004/06/01
Draw No
TFC-1
Page No
04/11
Drawer
Tel
Fax
Model
TFC-68/128/166
File Name
Customer Name

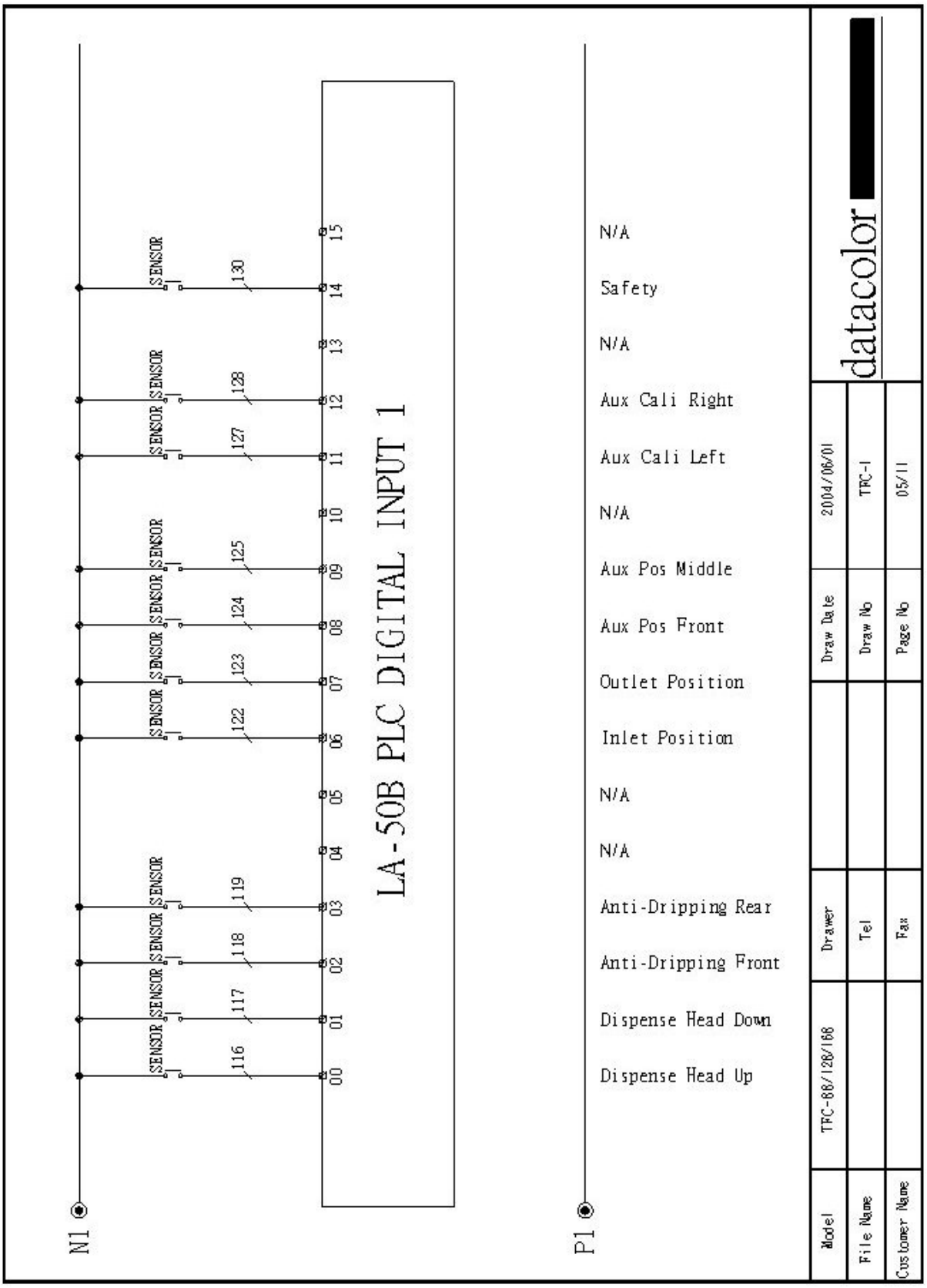
LA-50B PLC DIGITAL INPUT 1
N1
P1
SENSOR
116
117
118
119
122
123
124
125
127
128
130
00
01
02
03
04
05
06
07
08
09
10
11
12
13
14
15
N/A
Safety
N/A
Aux Cali Right
Aux Cali Left
N/A
Aux Pos Middle
Aux Pos Front
Outlet Position
Inlet Position
N/A
N/A
Anti-Dripping Rear
Anti-Dripping Front
Dispense Head Down
Dispense Head Up
dataco
Draw Date
2004/06/01
Draw No
TFC-1
Page No
05/11
Drawer
Tel
Fax
Model
TFC-68/128/168
File Name
Customer Name

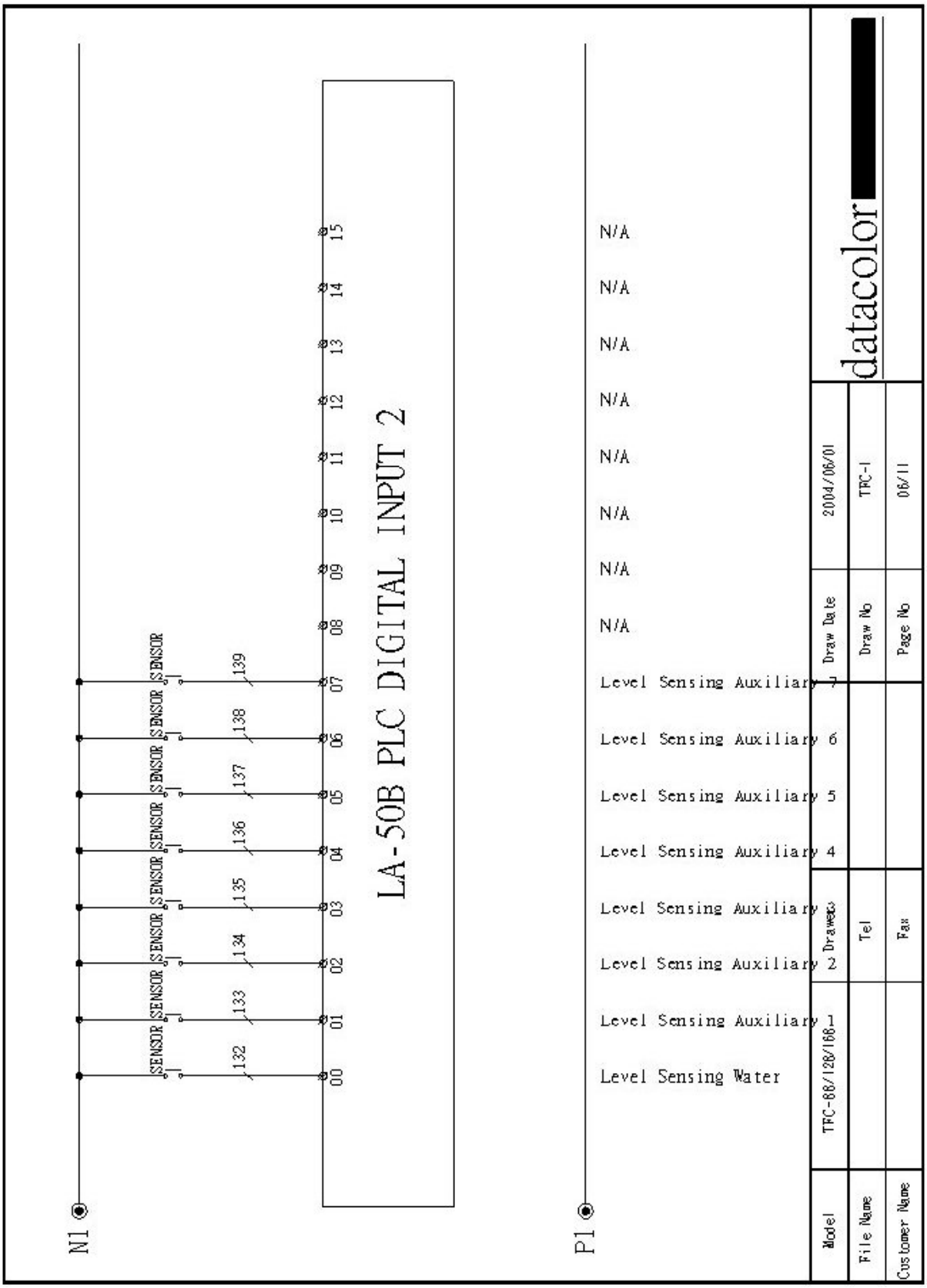
LA-50B PLC DIGITAL INPUT 2
N1
P1
SENSOR
132
133
134
135
136
137
138
139
00
01
02
03
04
05
06
07
08
09
10
11
12
13
14
15
N/A
N/A
N/A
N/A
N/A
N/A
N/A
N/A
Level Sensing Auxiliary 7
Level Sensing Auxiliary 6
Level Sensing Auxiliary 5
Level Sensing Auxiliary 4
Level Sensing Auxiliary 3
Level Sensing Auxiliary 2
Level Sensing Auxiliary 1
Level Sensing Water
datacolor
Model
TFC-68/128/168
Drawer
File Name
Tel
Customer Name
Fax
Draw Date
2004/06/01
Draw No
TFC-1
Page No
06/11

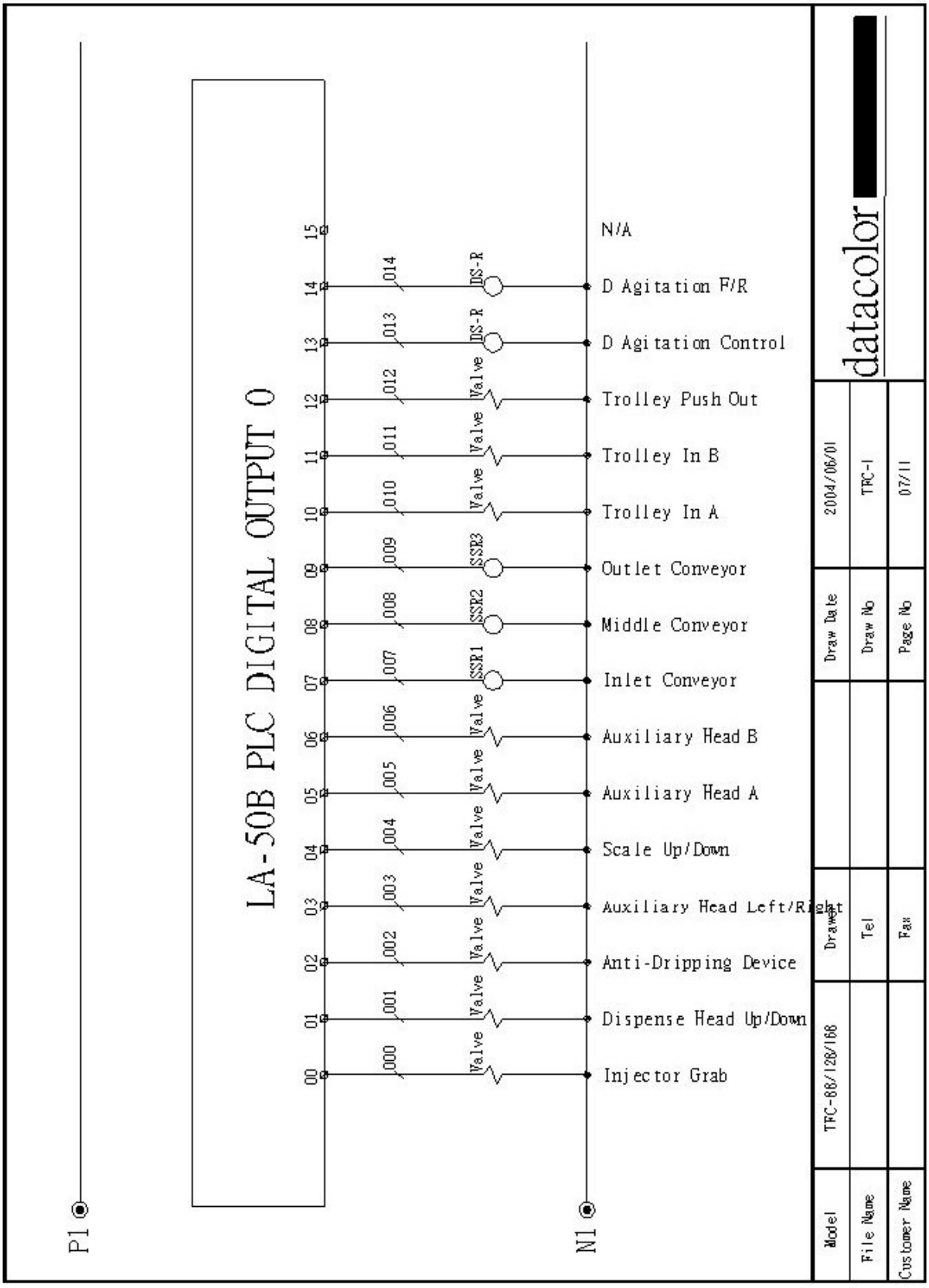
LA-50B PLC DIGITAL OUTPUT 0
P1
N1
15 N/A
14 014 DS-R D Agitation F/R
13 013 DS-R D Agitation Control
12 012 Valve Trolley Push Out
11 011 Valve Trolley In B
10 010 Valve Trolley In A
09 009 SSR3 Outlet Conveyor
08 008 SSR2 Middle Conveyor
07 007 SSR1 Inlet Conveyor
06 006 Valve Auxiliary Head B
05 005 Valve Auxiliary Head A
04 004 Valve Scale Up/Down
03 003 Valve Auxiliary Head Left/Right
02 002 Valve Anti-Dripping Device
01 001 Valve Dispense Head Up/Down
00 000 Valve Injector Grab
dataco[redacted]r
2004/06/01
TFC-I
07/11
Draw Date
Draw No
Page No
Drawer
Tel
Fax
Model
TFC-68/128/168
File Name
Customer Name

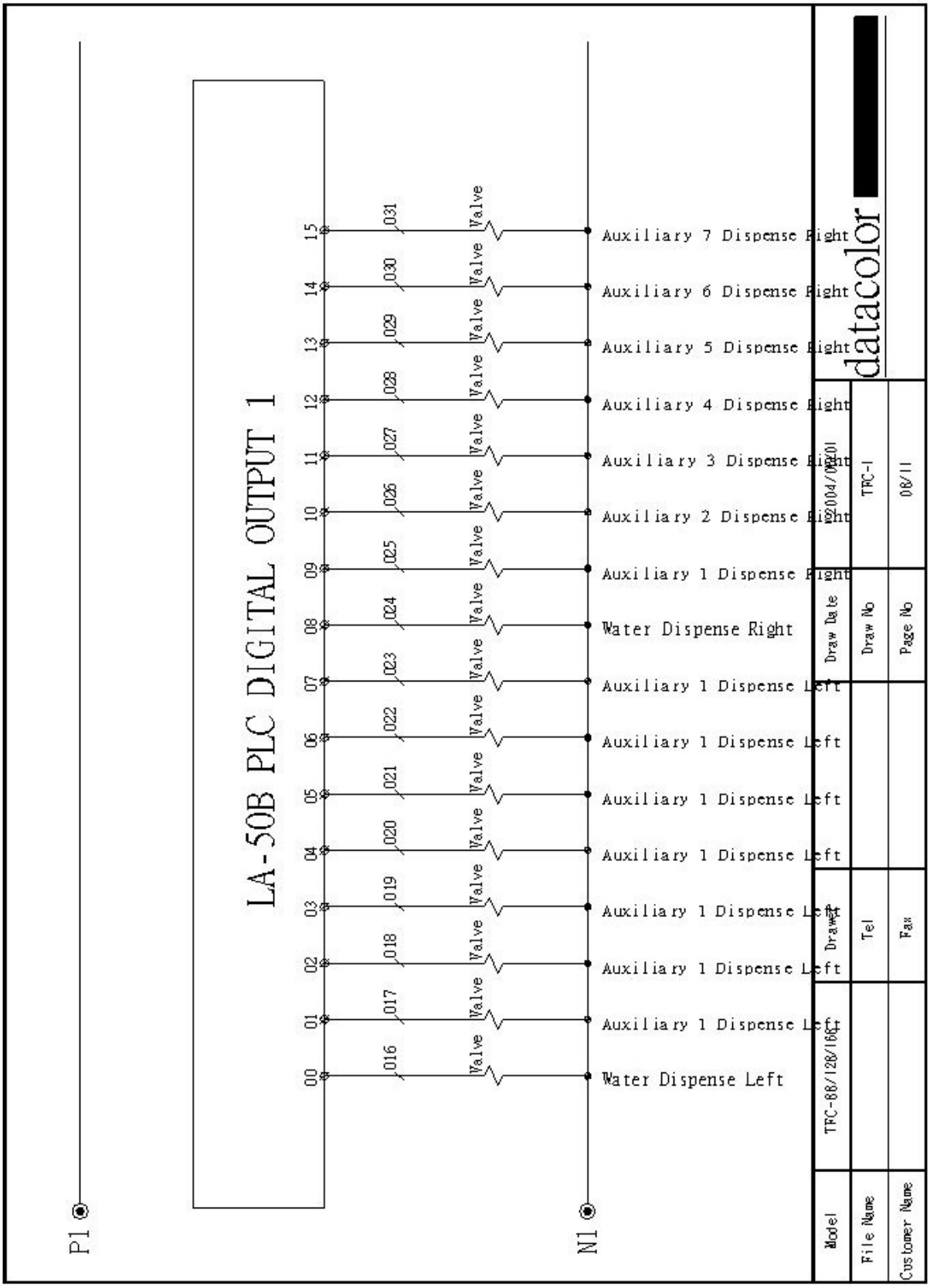
LA-50B PLC DIGITAL OUTPUT 1
P1
N1
00 01 02 03 04 05 06 07 08 09 10 11 12 13 14 15
016 017 018 019 020 021 022 023 024 025 026 027 028 029 030 031
Valve
Water Dispense Left
Auxiliary 1 Dispense Left
Auxiliary 1 Dispense Left
Auxiliary 1 Dispense Left
Auxiliary 1 Dispense Left
Auxiliary 1 Dispense Left
Auxiliary 1 Dispense Left
Auxiliary 1 Dispense Left
Water Dispense Right
Auxiliary 1 Dispense Right
Auxiliary 2 Dispense Right
Auxiliary 3 Dispense Right
Auxiliary 4 Dispense Right
Auxiliary 5 Dispense Right
Auxiliary 6 Dispense Right
Auxiliary 7 Dispense Right
datacolor
Model
File Name
Customer Name
Draw Date
Draw No
Page No
Tel
Fax
TFC-1
08/11

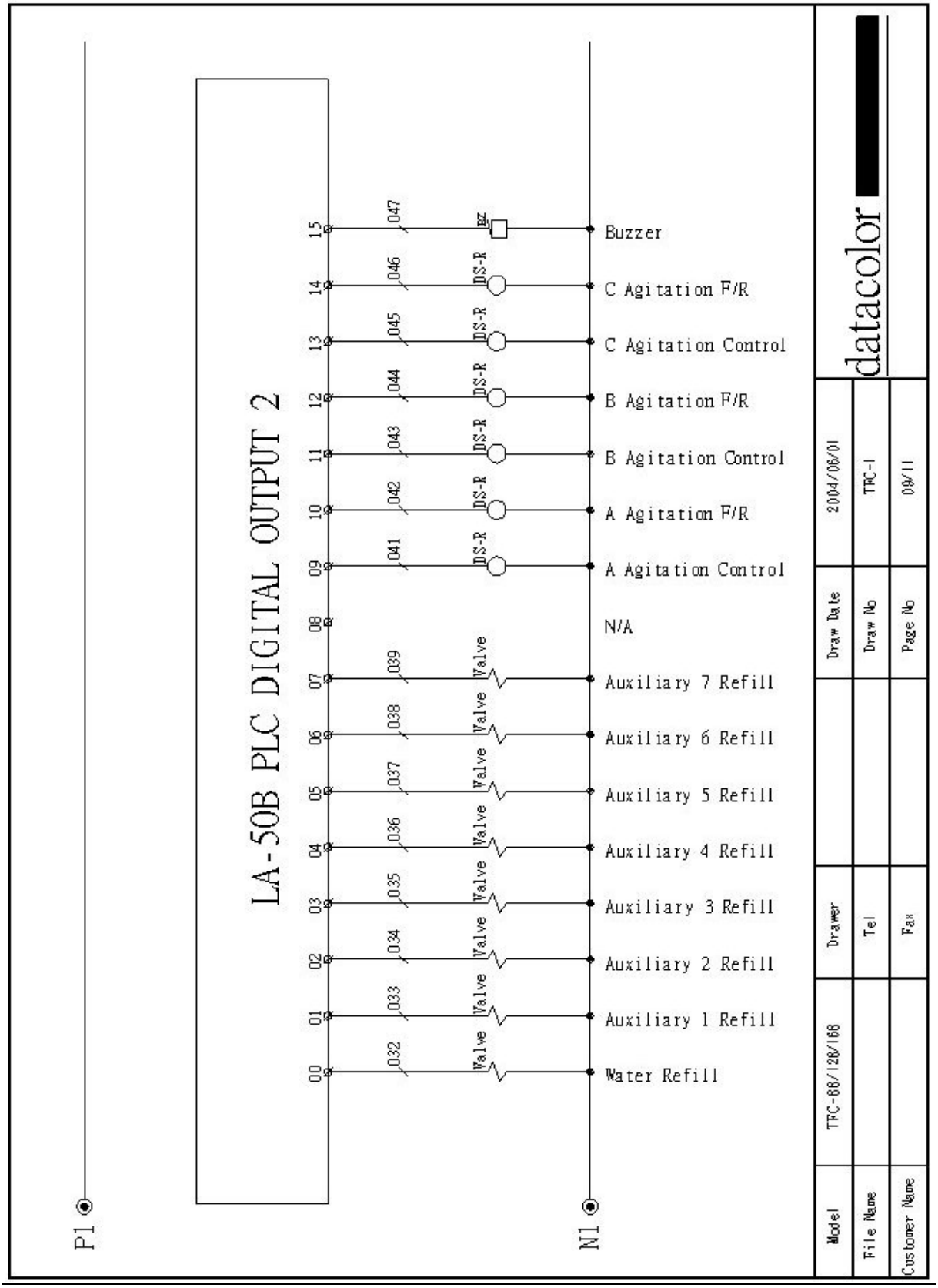
LA-50B PLC DIGITAL OUTPUT 2
P1
N1
15 047 Buzzer
14 046 DS-R C Agitation F/R
13 045 DS-R C Agitation Control
12 044 DS-R B Agitation F/R
11 043 DS-R B Agitation Control
10 042 DS-R A Agitation F/R
09 041 DS-R A Agitation Control
08 N/A
07 039 Valve Auxiliary 7 Refill
06 038 Valve Auxiliary 6 Refill
05 037 Valve Auxiliary 5 Refill
04 036 Valve Auxiliary 4 Refill
03 035 Valve Auxiliary 3 Refill
02 034 Valve Auxiliary 2 Refill
01 033 Valve Auxiliary 1 Refill
00 032 Valve Water Refill
datacolor
2004/06/01
TFC-I
09/11
Draw Date
Draw No
Page No
Model
TFC-68/128/168
Drawer
File Name
Tel
Customer Name
Fax

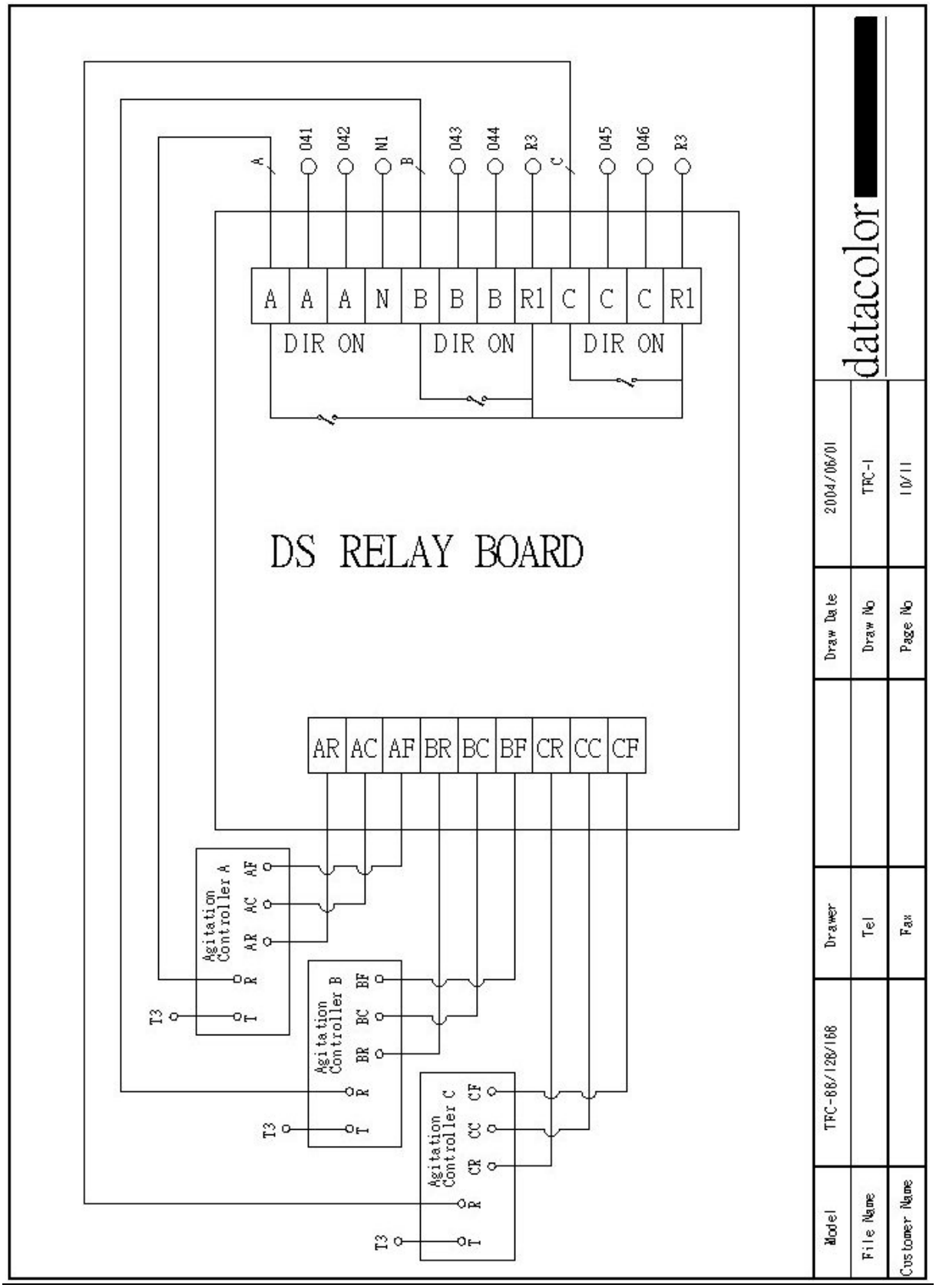
A
041
042
N1
B
043
044
R3
C
045
046
R3
A A A N B B B R1 C C C R1
DIR ON
DIR ON
DIR ON
DS RELAY BOARD
AR AC AF BR BC BF CR CC CF
Agitation Controller A
AF AC AR
R
T
T3
Agitation Controller B
BF BC BR
R
T
T3
Agitation Controller C
CF CC CR
R
T
T3
dataColor
2004/06/01
TFC-I
10/11
Draw Date
Draw No
Page No
Drawer
Tel
Fax
TFC-68/128/168
Model
File Name
Customer Name

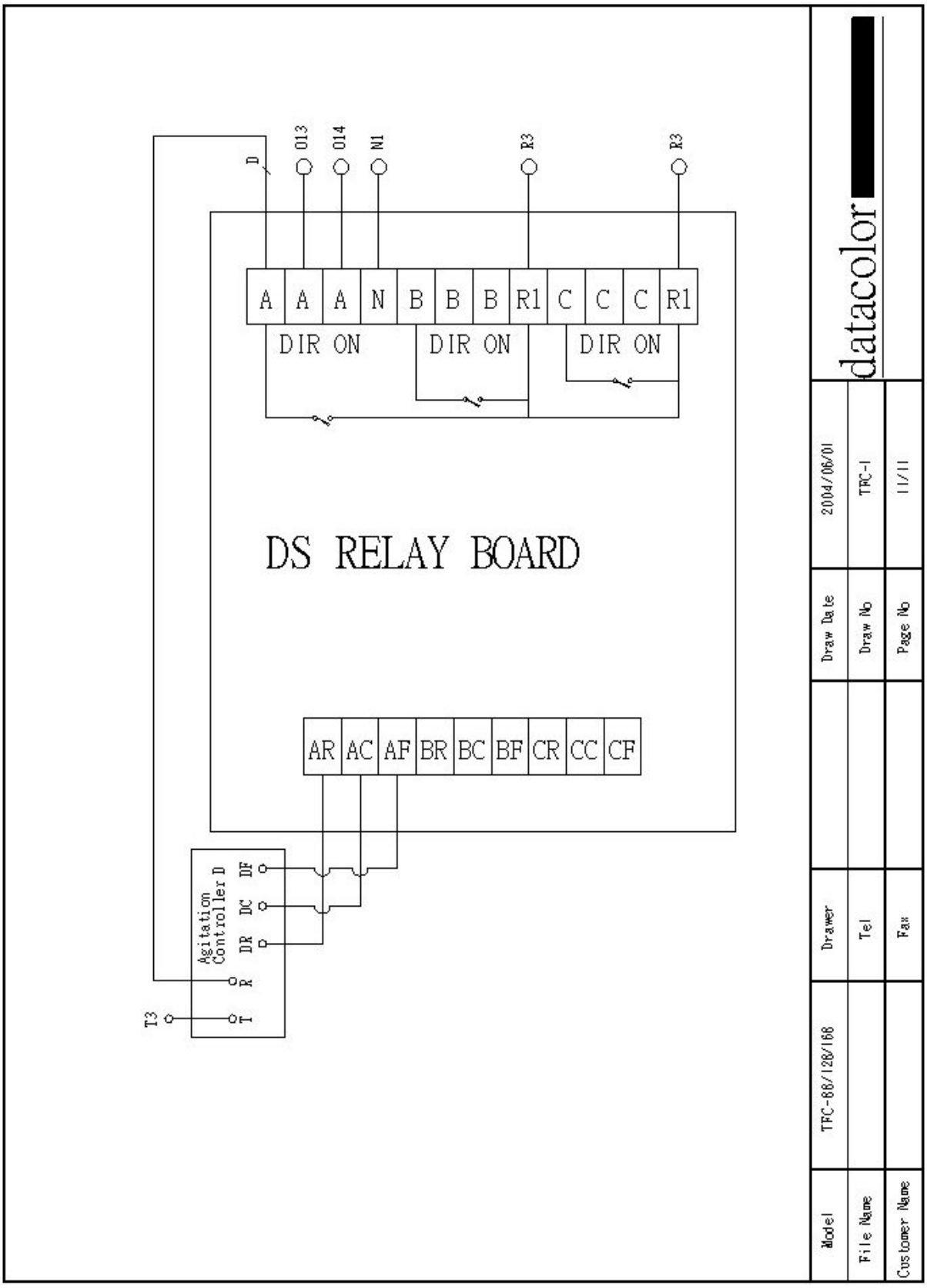
D
013
014
N1
R3
R3
A A A N B B B R1 C C C R1
DIR ON
DIR ON
DIR ON
DS RELAY BOARD
AR AC AF BR BC BF CR CC CF
Agitation Controller D
DF
DC
DR
R
T
T3
dataColor
2004/06/01
TFC-1
11/11
Draw Date
Draw No
Page No
Drawer
Tel
Fax
TFC-68/128/168
Model
File Name
Customer Name

2-3-6 The indication of sticker for TF40/80/120/160

TF-40 sticker and wire no. table

STICKER	EXPLAINATION	WIRE NO.
HDUD	Valves for dispense head up/down	001
GRAB	Valve for Grab Hand	000
ANDP	Valve for Anti-drip plate	002
XR	X approach sensor	XR
YR	Y approach sensor	YR
ZR	Z approach sensor	ZR
INSR	Injector sensor	I11
ASUD	Valves for Tray A up/down	003
AFED	Valves for A Dye pot loading	004
AWHD	Valves for A water dispense head	005; 006
AIR INLET	Air Inlet	
POWER INLET	Left side of power entrance	
AC220V 1PHASE	Up side of power entrance	
RS485	RS485 signal wire	
DSPSU	DC24V power supply	
CPU0	First LA50B CPU	
SERVO	LA50B SERVO	
DIO0	First LA50B DIO	
XAMP	X Servo Amplifier	
YAMP	Y Servo Amplifier	
ZAMP	Z Servo Amplifier	
DSRLY	A DS Relay	
FS1	AC220V Fuse	
FS2	AC220V Fuse	
FS3	DC24V Fuse	
FS4	AC24V Fuse	
FS5	DC24V Fuse	
FS6	DC24V Fuse	
R1	Main Power controller	
NFB1	Main Power breaker	
NFB2	PSU breaker	
MC1	Main Power magnetic connector	

TF-80/120 sticker and wire no. table

STICKER	EXPLAINATION	WIRE NO.
GRAB	Valve for Grab Hand	000
ANDP	Valve for Anti-drip plate	002
XR	X approach sensor	XR
YR	Y approach sensor	YR
ZR	Z approach sensor	ZR
INSR	Injector sensor	I11
ASUD	Valves for Trays A up/down	003
AFED	Valves for A Dye pot loading	004
AWHD	Valves for A water dispense head	005; 006
BSUD	Valves for Trays B up/down	019
BFED	Valves for B Dye pot loading	020
BWHD	Valves for B water dispense head	021; 022
AIR INLET	Air Inlet	
POWER INLET	Left side of power entrance	
AC220V 1PHASE	Up side of power entrance	
RS485	RS485 signal wire	
DSPSU	DC24V power supply	
CPU0	First LA50B CPU	
SERVO	LA50B SERVO	
DIO0	First LA50B DIO	
CPU1	Second LA50B CPU	
DIO1	Second LA50B DIO	
XAMP	X Servo Amplifier	
YAMP	Y Servo Amplifier	
ZAMP	Z Servo Amplifier	
DSRLY	A ~ C DS Relay	
FS1	AC220V Fuse	
FS2	AC220V Fuse	
FS3	DC24V Fuse	
FS4	AC24V Fuse	
FS5	DC24V Fuse	
FS6	DC24V Fuse	
R1	Main Power controller	
NFB1	Main Power breaker	
NFB2	PSU breaker	
MC1	Main Power magnetic connector	

TF-160 sticker and wire no. table

STICKER	EXPLAINATION	WIRE NO.
HDUD	Valves for dispense head up/down	001
GRAB	Valve for Grab Hand	000
ANDP	Valve for Anti-drip plate	002
XR	X approach sensor	XR
YR	Y approach sensor	YR
ZR	Z approach sensor	ZR
INSR	Injector sensor	I11
ASUD	Valves for Trays A up/down	003
AFED	Valves for A Dye pot loading	004
AWHD	Valves for A water dispense head	005; 006
BSUD	Valves for Trays B up/down	019
BFED	Valves for B Dye pot loading	020
BWHD	Valves for B water dispense head	021; 022
AIR INLET	Air inlet	
POWER INLET	Left side of power entrance	
AC220V 1PHASE	Up side of power entrance	
RS485	RS485 signal wire	
DSPSU	DC24V power supply	
CPU0	First LA50B CPU	
SERVO	LA50B SERVO	
DIO0	First LA50B DIO	
CPU1	Second LA50B CPU	
DIO1	Second LA50B DIO	
XAMP	X Servo Amplifier	
YAMP	Y Servo Amplifier	
ZAMP	Z Servo Amplifier	
DSRLY-1	A ~ C DS Relay	
DSRLY-2	D DS Relay	
FS1	AC220V Fuse	
FS2	AC220V Fuse	
FS3	DC24V Fuse	
FS4	AC24V Fuse	
FS5	DC24V Fuse	
FS6	DC24V Fuse	
R1	Main Power controller	
NFB1	Main Power breaker	
NFB2	PSU breaker	
MC1	Main Power magnetic connector	

TF-40 Air-tube label table

LABEL	EXPLAINATION	FUNCTION
01	Dispense head up/down valve	In
02	Dispense head up/down valve	Out
03	Grab hand valve	In
04	Grab hand valve	Out
05	Anti-drip valve	In
06	Anti-drip valve	Out
07	Tray up/down valve	In
08	Tray up/down valve	Out
09	In-let valve	In
10	In-let valve	Out
11	Aux. front/back valve	In
12	Aux. front/back valve	Out

TF-80/120/160 Air-tube label table

LABEL	EXPLAINATION	FUNCTION
01	Dispense head up/down valve	In
02	Dispense head up/down valve	Out
03	Grab hand valve	In
04	Grab hand valve	Out
05	Anti-drip valve	In
06	Anti-drip valve	Out
07	A Tray up/down valve	In
08	A Tray up/down valve	Out
09	A In-let valve	In
10	A In-let valve	Out
11	A Aux. front/back valve	In
12	A Aux. front/back valve	Out
13	B Tray up/down valve	In
14	B Tray up/down valve	Out
15	B In-let valve	In
164	B In-let valve	Out
17	B Aux. front/back valve	In
18	B Aux. front/back valve	Out

2-3-7 The indication of sticker for TFC-88/128/168

TF-88 sticker and wire no. table

STICKER	EXPLAINATION	WIRE NO.
HDUD	Valves for dispense head up/down	001
GRAB	Valve for Grab Hand	000
ANDP	Valve for Anti-drip plate	002
XR	X approach sensor	XR
YR	Y approach sensor	YR
ZR	Z approach sensor	ZR
INSR	Injector sensor	I15
SSR1	In-feed Conveyor Controller	007
SSR2	Dispensing Conveyor Controller	008
SSR3	Out-feed Conveyor Controller	009
SUD	Valves for Trays A up/down	004
INFD	Valves for Loading cylinder	010; 011
OUFD	Valves for Un-loading cylinder	012
AUCA	Valves for Aux. dispense head calibration	003
AUMV	Valves for Aux. disp head forward/backward	005; 006
AURF	Valves for Aux. Refill	
AIR INLET	Air inlet	
POWER INLET	Left side of power entrance	
AC220V 1PHASE	Up side of power entrance	
RS485	RS485 signal wire	
DSPSU	DC24V power supply	
CPU0	First LA50B CPU	
SERVO	LA50B SERVO	
DIO0	First LA50B DIO	
DIO1	Second LA50B DIO	
DIO2	Third LA50B DIO	
XAMP	X Servo Amplifier	
YAMP	Y Servo Amplifier	
ZAMP	Z Servo Amplifier	
DSRLY	A ~ B DS Relay	
FS1	AC220V Fuse	
FS2	AC220V Fuse	
FS3	DC24V Fuse	
FS4	AC24V Fuse	
FS5	DC24V Fuse	
FS6	DC24V Fuse	
R1	Main Power controller	
NFB1	Main Power breaker	
NFB2	PSU breaker	
MC1	Main Power magnetic connector	

TF-128 sticker and wire no. table

STICKER	EXPLAINATION	WIRE NO.
HDUD	Valves for dispense head up/down	001
GRAB	Valve for Grab Hand	000
ANDP	Valve for Anti-drip plate	002
XR	X approach sensor	XR
YR	Y approach sensor	YR
ZR	Z approach sensor	ZR
INSR	Injector sensor	I15
SSR1	In-feed Conveyor Controller	007
SSR2	Dispensing Conveyor Controller	008
SSR3	Out-feed Conveyor Controller	009
SUD	Valves for Trays A up/down	004
INFD	Valves for Loading cylinder	010; 011
OUFD	Valves for Un-loading cylinder	012
AUCA	Valves for Aux. dispense head calibration	003
AUMV	Valves for Aux. disp head forward/backward	005; 006
AURF	Valves for Aux. Refill	
AIR INLET	Air inlet	
POWER INLET	Left side of power entrance	
AC220V 1PHASE	Up side of power entrance	
RS485	RS485 signal wire	
DSPSU	DC24V power supply	
CPU0	First LA50B CPU	
SERVO	LA50B SERVO	
DIO0	First LA50B DIO	
DIO1	Second LA50B DIO	
DIO2	Third LA50B DIO	
XAMP	X Servo Amplifier	
YAMP	Y Servo Amplifier	
ZAMP	Z Servo Amplifier	
DSRLY	A ~ C DS Relay	
FS1	AC220V Fuse	
FS2	AC220V Fuse	
FS3	DC24V Fuse	
FS4	AC24V Fuse	
FS5	DC24V Fuse	
FS6	DC24V Fuse	
R1	Main Power controller	
NFB1	Main Power breaker	
NFB2	PSU breaker	
MC1	Main Power magnetic connector	

TF-168 sticker and wire no. table

STICKER	EXPLAINATION	WIRE NO.
HDUD	Valves for dispense head up/down	001
GRAB	Valve for Grab Hand	000
ANDP	Valve for Anti-drip plate	002
XR	X approach sensor	XR
YR	Y approach sensor	YR
ZR	Z approach sensor	ZR
INSR	Injector sensor	I15
SSR1	In-feed Conveyor Controller	007
SSR2	Dispensing Conveyor Controller	008
SSR3	Out-feed Conveyor Controller	009
SUD	Valves for Trays A up/down	004
INFD	Valves for Loading cylinder	010; 011
OUFD	Valves for Un-loading cylinder	012
AUCA	Valves for Aux. dispense head calibration	003
AUMV	Valves for Aux. disp head forward/backward	005; 006
AURF	Valves for Aux. Refill	
AIR INLET	Air inlet	
POWER INLET	Left side of power entrance	
AC220V 1PHASE	Up side of power entrance	
RS485	RS485 signal wire	
DSPSU	DC24V power supply	
CPU0	First LA50B CPU	
SERVO	LA50B SERVO	
DIO0	First LA50B DIO	
DIO1	Second LA50B DIO	
DIO2	Third LA50B DIO	
XAMP	First LA50B DIO	
YAMP	Second LA50B DIO	
ZAMP	Third LA50B DIO	
DSRLY-1	A~D DS Relay	
DSRLY-2	D DS Relay	
FS1	AC220V Fuse	
FS2	AC220V Fuse	
FS3	DC24V Fuse	
FS4	AC24V Fuse	
FS5	DC24V Fuse	
FS6	DC24V Fuse	
R1	Main Power controller	
NFB1	Main Power breaker	
NFB2	PSU breaker	
MC1	Main Power magnetic connector	

TF-88/128/168 Air-tube label table

LABEL	EXPLAINATION	FUNCTION
01	Dispense head up/down valve	In
02	Dispense head up/down valve	Out
03	Grab hand valve	In
04	Grab hand valve	Out
05	Anti-drip valve	In
06	Anti-drip valve	Out
07	A Tray up/down valve	In
08	A Tray up/down valve	Out
09	In-let valve	In
10	In-let valve	Out
11	Out-let valve	In
12	Out-let valve	Out
13	Aux. calibration valve	In
14	Aux. calibration valve	Out
15	Aux. front/back valve	In
16	Aux. front/back valve	Out
82/122/162	Aux. 82/122/162 refill valve	In
83/123/163	Aux. 83/123/163 refill valve	In
84/124/164	Aux. 84/124/164 refill valve	In
85/125/165	Aux. 85/125/165 refill valve	In
86/126/166	Aux. 86/126/166 refill valve	In
87/127/167	Aux. 87/127/167 refill valve	In
88/128/168	Aux. 88/128/168 refill valve	In

2-4 Balance

2-4-1 The Parameter Setup Of Balance

Mettler Toledo PG6002S

The detailed description of the menu options is given as below:

- To entry the setup menu, hold down the “MENU” key about 3 seconds when the power is on.
- Press “MENU” to switch the menu item one by one.
- Press ”F” key to change the setting and hold down “MENU” key to save the setting.
- Each time you can only change one setting, and repeat the above step to change the others.

PS：Press “C” key exit and the setting don’t save.

The settings of scale should be same as below:

NO.	FUNCTION	EXPLAINATION AutoLab TF
1	**RESET**	Call-up the factory setting.
2	**CAL OFF**	Need engineer to enable calibration only.
3	**INFO OFF**	Don’t show the calibration info.
4	**F none**	No available in weighing operation at a keystroke.
5	**~ 3**	The ambient condition is unstable.
6	**、 3**	The weighing process is absolute weighing.
7	**GOOD**	The repeatability is good.
8	**Unit 1 g**	The 1st weighing unit is gram.
9	**Unit 2 g**	The 2nd weighing unit is gram.
10	**AZ. OFF**	The automatic zero correction is off.
11	**A.OFF**	The automatic shutdown is off.
12	**qu.START**	Start without display test.
13	**ON**	Display the icons.
14	**HOST**	Attachment to a host.
15	**S.CONT**	Data transfer mode is continuation.
16	**S.SICS**	Data transfer format is MT-SICS.
17	**bd 9600**	Data transfer speed is 9600bps.
18	**8b-no**	Character format is 8bit no parity.
19	**HS OFF**	Handshake is off.
20	**Secure 2**	Lock control panel

Note that it is recommended by Mettler that scales are left on to warm up for a period of time before using them. The time recommended is as follows:
Mettler PG4002-S and PG-6002-S scales should be left switched on for 30 minutes for stability warm up prior to using them.
Mettler PR5003-DR and PR-2003-DR scales should be left switched on for 60 minutes for stability warm up prior to using them.

Precisa XT6200C

The detailed description of the menu options is given as below:

- To entry the configuration menu, hold down the "**MENU**" key about 10 seconds when the power is on.
- To entry the application menu, after the start up process finished, hold down the the "**MENU**" key about 5 seconds
- "←" and "→" change from main menu path into sub-path and back.
- "↑" and "↓" Up/down movement within the main and sub-paths. Change selected parameter.
- " ↵ " Select parameters and store changed parameters.
- "**Esc**" Interrupt an input and leave the menu.

The settings of scale should be same as below:

Configuration Menu

NO.	Main Menu	Setting	Sub-Menu	Setting
1	Configuration	**Factory Configuration**		
2	Unit 1	**g**		
3	Set Data Print		Auto-Start	**On**
			Mode	**Continuous**
			Set Pringformat	**All off**
5	Set Calibration		Mode	**Internal**
6	Set Weighing Mode		Floating Display	**0.16**
			Stability	**Low**
			Auto Standby	**Off**
			Auto Zero	**On**
			Quick Tare	**Off**
7	Set interface		Baudrate	**9600**
			Parity	**8-NO-1Stop**
			Handshake	**No**
8	Set Date and Time	**As request**		
9	Set Password		Data Protection	**Off**
10	THEFTCODE		THEFT-protection	**Off**
11	Language		Language	**English**
12	Contrast	**6**		

Application Menu

NO.	Main Menu	Setting	Sub-Menu	Setting
1	Set App.	**Off**		
2	Set Statistic		Mode	**Off**
3	Set Check +/-	**Off**		
4	Auto Start	**Off**		

***It has to change the tare command in AutoLabTFCtrl－Parameter Setup－Engineer Setup－Define tare command as "T".**

Sartorius LP5200P

The detailed description of the menu options is given as below:

- Press “SETUP” to entry parameter setup menu.
- Press “❮❯” key to select balance scale functions group code.
- Press ”∧” or “∨”, keys to select the application prog.group.
- Press “〈” or “〉” to confirm or cancel the program.
- Press “SETUP” key to save setting and exit menu.

Level 1	Level 2	Level 3
1 Balance Functions	11 Adapt filter	112 Normal Vibration
	12 Application filter	121 Final readout
	13 Stability range	134 2 digits
	15 Taring	152 After stability
	16 Auto Zero	161 On
	17 Weight unit 1	172 Grams/g
	18 Display accuracy 1	181 All digits
	19 “Cal” key function	194 Internal calibration
	110 Calibration	1102 Manual adjustment
	113 Tare with power on	1131 On
	115 isoCAL function	1155 On
2 Application programs	21 Application selection	211 Weighing
3 Application parameters	31 Weight unit 2	312 Grams/g
	32 Display accuracy 1	321 All digits
	35 Counting parameters	352 Display accuracy
	36 Decimal for calculation	363 2 decimal places
	37 Animal activity	372 Normal
	38 Start animal weighing	382 Automatic
	39 Print animal weights	392 On; animal weight
	310 Autostart application	3102 Off
4 Parameter +/-	42 Auto print +/-	422 Off
	43 +/- control ports on	431 Within control range
5 Interface	51 Baud rate	517 9600 baud
	52 Parity	522 Space
	53 No. of stop bits	531 1 stop bit
	54 Handshake mode	543 Hardware
	55 Communication mode	551 SBI
	56 Network address	561 Address 0
6 Print for weighing	61 Print manual/auto	614 Auto print without stability parameter
	62 Stop auto print	622 Not possible
	63 Time-dependent auto print	631 1 display update
	64 Print -> autotare	641 Off
7 Print for application	71 Print application parameters	711 Off
	72 Line format	722 For other applications
	73 Print net total	731 Auto print net
8 Extra functions	81 Menu	811 parameter setting alterable
	82 Acoustic signal	821 On
	83 Black keys	831 keys unblocked
	84 External switch function	841 “◙” key function
	85 Backlighting	851 On
	86 Power-on mode	861 On/off/standby
	87 Auto shutoff	872 Off
	88 Control port function	882 Output
	810 ISO/GLP printout	8101 Off
9 Balance menu	91 Factory setting	912 Do not restore

Mettler Toledo PM4800 as fabric scale

The detailed description of the menu options is given as below:

- To entry the setup menu, hold down the “MENU” key about 3 seconds when the power is on.
- Press “MENU” to switch the menu item one by one.
- Press ”F” key to change the setting and hold down “MENU” key to save the setting.
- Each time you can only change one setting, and repeat the above step to change the others.

PS：Press “C” key exit and the setting don’t save.

The settings of scale should be same as below:

NO.	FUNCTION	EXPLAINATION AutoLab TF
1	**RESET YES**	Call-up the factory setting.
2	**ASD -2-**	Automatic Stability Detection
3	**d 0.01**	Select Resolution
4	**d, d on**	The automatic zero correction is on.
5	**AZ on**	The ambient condition is normal.
6	**Unit 1 g**	The 1st weighing unit is gram.
7	**Unit 2 g**	The 2nd weighing unit is gram
8	**Prt off**	Printer/transfer command
9	**On**	Status indicator
10	**S cont.**	Data transfer mode
11	**b. 9600**	Baud rate
12	**p. –S-**	Parity
13	**PAUSE 0**	Pause between transfers
14	**AUTO off**	

Mettler PL202 as fabric scale

- To enter the setup menu, make sure the scale is on, and hold down the "MENU" key pressed until the words MENU appear. The release the key
- Then briefly press → key to switch between menu items, one by one.
- Press the "↻" key (two circular arrows) to change the setting, and press and hold down the "MENU" key to save the setting.
- Each time you can only change one setting, and repeat the above step to change the others.

PS：Press "C" key to abort and exit without saving any changes that have been made.

The settings of Mettler PL 202S scale for use as fabric weigh scale should be as below:

NO.	FUNCTION	EXPLAINATION AutoLab TF
1	**RESET YES**	Call-up the factory setting.
2	**F none**	No available in weighing operation at a keystroke.
3	**Unit 1 g**	The 1st weighing unit is gram.
4	**Unit 2 g**	The 2nd weighing unit is gram
5	**AZ. OFF**	The automatic zero correction is off.
6	**A.OFF**	The automatic shutdown is off.
7	**HOST**	Attachment to a host.
8	**S cont.**	Data transfer mode
9	**S.SICS**	Data transfer format is MT-SICS.
10	**b. 9600**	Baud rate
11	**8b-no**	Character format is 8bit no parity.
12	**HS OFF**	Handshake is off.

Also refer to Mettler manual which can be downloaded from the Datacolor intranet at:
http://intranet.datacolor.com/products/AutolabTF/Support/Tecman/TFMETTPLOPMN01.pdf

The wiring of RS-232 communication cable

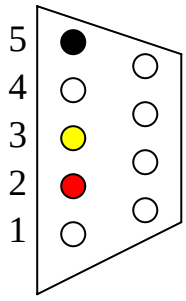

RS-232 female connected to PC Com port

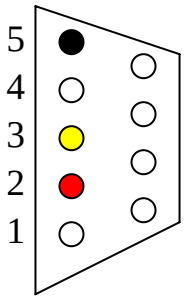

RS-232 male connected to scale Com port

AutoLab TF DP Program Setup

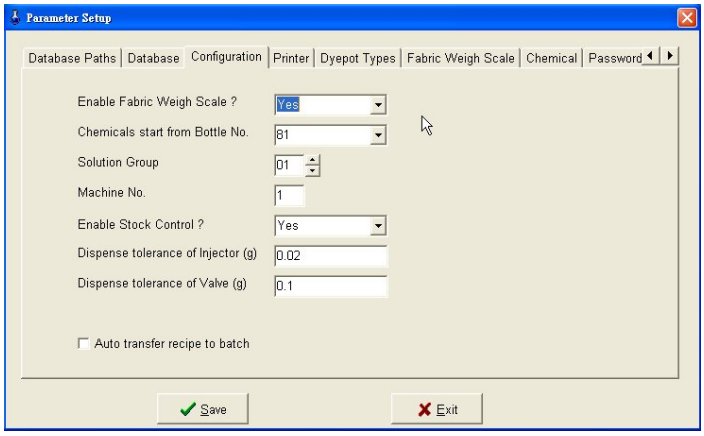

Enable fabric weigh scale function in AutoLab TF DP parameter setup-configuration.

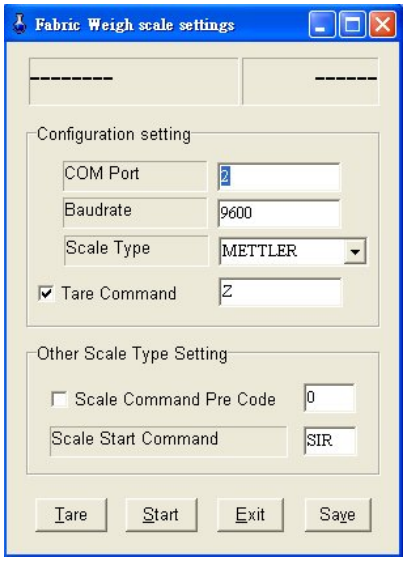

Go to the “Fabric Weigh Scale” page in AutoLab TF DP parameter setup. Settings are as figuration shown. When the scale and PC communication is successful, scale reading will show in the box above.

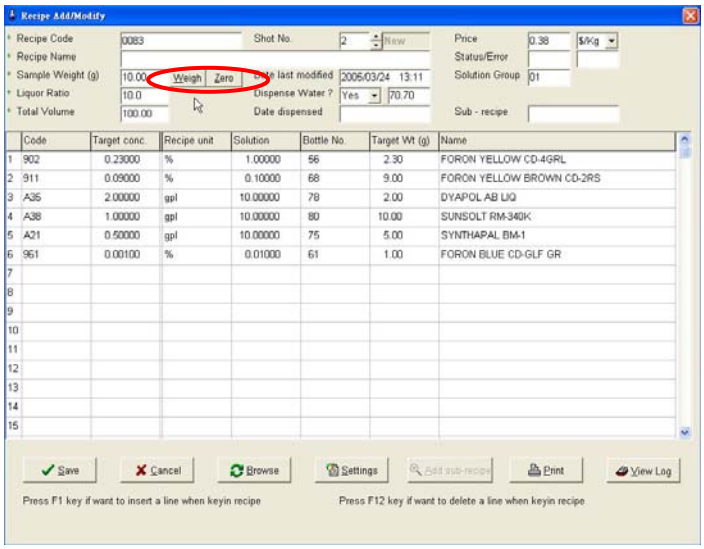

In Add/Modify Recipe, use mouse to click on the buttons beside “Sample Weight” box to weigh the fabric or tare the scale.

2-4-2 Balance calibration

Mettler Scale

Internal Calibration

STEP1 : Push the button on the plate **1/10d Cal** for 3 seconds for automatic rectification.

STEP2 : **Cal done** on the screen means rectification done.

External Calibration (for 3, 4, 5, and 6 kg scale)

STEP1 : Push the button on the plate **Menu** for 3 seconds, **Reset** on the screen.

STEP2 : Push again **Menu** for one time, **Fact** on the screen.

STEP3 : Push the button on the plate **F**, and then **Vari Cal** on the screen.

STEP4 : Push the button on the plate **Menu** for 3 seconds, **Stored** on the screen, then back to main screen.

STEP5 : Push the button on the plate **1/10d Cal** for 3 seconds, **Cal 5000g** on the screen.

STEP6 : Push the button on the plate **F** for rectify the weight to 3000g.

STEP7 : Push the button on the plate **Menu** for 3 seconds, **3000g** on the screen.

STEP8 : Put calibrate weight 3 kg for rectification, then **0.00g** on the screen flashing.

STEP9 : Take down calibrate weight, **Cal done** on the screen for rectification done.

For changing to Inside rectification, Please have Vari Cal change to saved.

Fact

Precisa XT6200C

Internal Calibration

STEP 1 : Switch to “BALANCING” with the change key.

STEP 2 : Press < T > until “CALIBRATION” is appears.

STEP 3 : The calibration is finished after a certain period of time.

External Calibration

STEP 1 : Switch to “BALANCING” with the change key.

STEP 2 : Press < T > until “CALIBRATION” is appears.

STEP 3 : The balance carries out a Zero measurement (0.000g is shown flashing).

STEP 4 : After the zero measurement the display flashes with the recommended calibration weight.

STEP 5 : Place the calibration weight on the pan.

STEP 6 : The display continues to flash.

STEP 7 : Calibration is complete when the display stops flashing.

Sartorius LP5200P

Internal Calibration

STEP 1：Change the calibration parameter to “194” (internal calibration).

STEP 2：Press “Cal” key and 2 chooses will be shown on the display.

STEP 3：Press “F” key to select “Int. Adjust”.

STEP 4：Press “Cal” key until the display stops flashing and calibration complete.

External Calibration

STEP 1：Change the calibration parameter to “193” (External calibration).

STEP 2：Press “SETUP” key and choose “Input”.

STEP 3：Press “⇳” key, the display will show “2000.00g”.

STEP 4：Use number keys on the bottom, change the display to 3000.00g”.

STEP 5：Press “F” key to save the standard weight.

STEP 6：Press “SETUP” to save parameter.

STEP 7：Press “F” key to select “Def. Ext Adjust”.

STEP 8：Press “Cal” key and put 3kg standard weight.

STEP 9：Wait around 30 seconds to complete calibration.

2-5 Servo System

2-5-1 Sanyo PV Type Amplifier Servo System

The major mechanism of TF is the robotic arm. This mechanism is operate and control by a three axis servo control system. The current servo control system we used is made by Japan, the Sanyo Denki. In this section we will spend some time to explain the functionality and wiring of servo control system. Below picture is the appearance of servo pack.

Below is the block diagram of close loop of TF servo control.

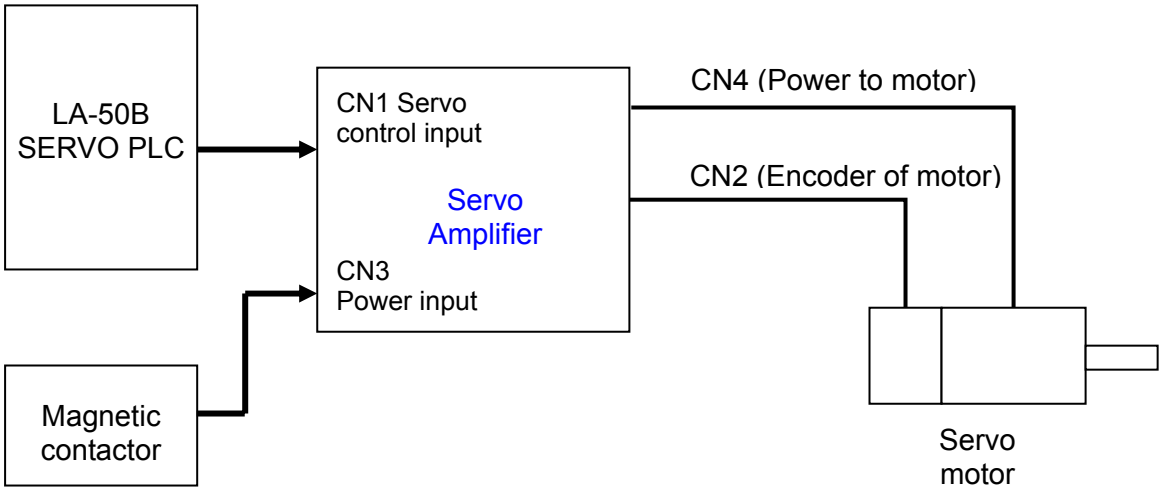

• External mount wiring diagram

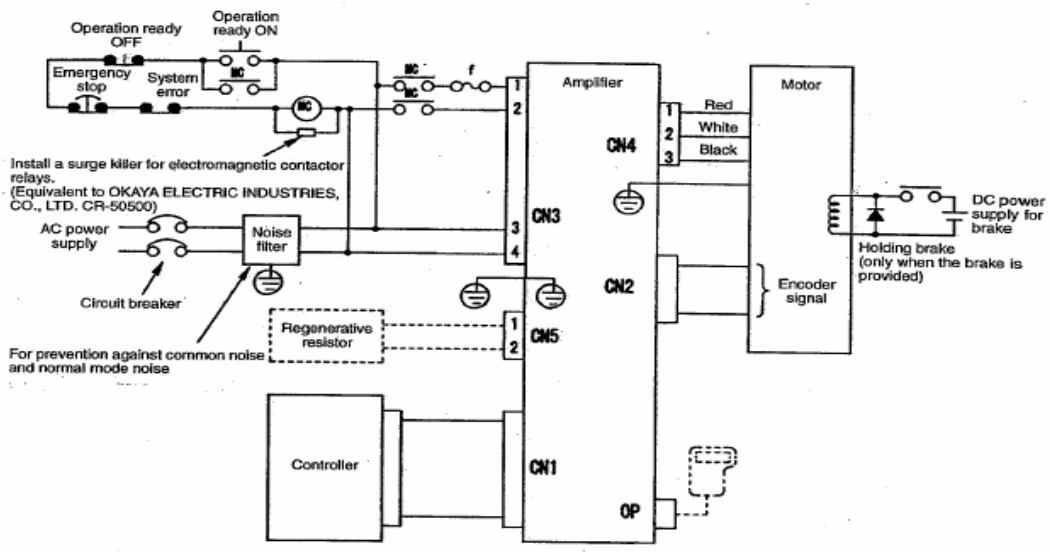

Explanation of device in block diagram:

1. LA-50B SERVO PLC: Communicate with LA-50B CPU PLC and then send out commend and target position for driving servo amplifier. The output of PLC connected to the CN1 port of servo amplifier. This cable is used for communicates between Servo PLC and amplifier. The pin assignment of this cable please refers to the introduction of LA-50B Servo PLC.

2. Magnetic contactor: The magnetic contactor engages when you press the “ON” push button at front panel. Then supply the single phase AC220V power to the CN3 of servo amplifier. There is a four pin connector to plug in. Pin assignment of this power cable is as bellowing table:

Pin number on amplifier	**Name**
1 & 3	Line (AC220V)
2 & 4	Neutral

3. Servo amplifier: There are two type of servo amplifier used in TF.

   The amplifier used for X and Y axis is Sanyo Denki PV1A015EMT8S00, AC200V~230V+10%;-15%, 15A, 400W, 2000 P/R encoder.

   The amplifier used for Z axis is Sanyo Denki PV1A015EM61S00, AC200V~230V+10%;-15%, 15A, 200W, 2000 P/R encoder.

4. The servo motor: There are two type of servo motor used in TF.

   The motor used for X and Y axis is P50B07040HXS3B, 3000 rpm, 400W.

   The motor used for Z axis is P50B07020DXS2B, 3000 rpm, 200W..

The servo motor communicates with amplifier by two cables. One is the power cable which connected to CN4 of amplifier. The other is the encoder cable which connected with the CN2 of amplifier.

2-5-2 Sanyo Denki PV Type Servo Amplifier

5V power supply indicator（POW）

Show that the internal 5V supply is on.

Alarm indicator lamps（ALM1、ALM2、ALM4）

Alarm statuses are shown.

Main circuit power charge (CHARGE)

Show that the smoothing capacitors of the main circuit power supply are charged.

Power input connecter（CN3）

Connect the control power supply and the main circuit power supply.

Regenerative resistor connecter (CN5)

Usually connects the built-in regenerative resistor, and can also connect an external regenerative resistor.

SERVO motor power plug

Connect SERVO motor power, and output with U, V, and W 3 phase.

Adjustor cap

With gain setting switch and selector.

SERVO ON indicator（SON）

Show the status of servo on.

Connecter for remote operation (OP)

The optional remote operation is connected.

Encoder connecter

The encoder signal cable is connected.

I/O signal connecter

A supervisory controller is connected.

Ground connecting terminal

Connect the grounding conductor of the servo motor and the grounding conductor of the power supply.

Gain setting switch（RSW）

A rotary switch used when setting various gains in the amplifier assembly.

Warning: Please do not change the setting of this switch.

Selector switch (SW)

Used to determine which of main unit rotary switch setting and remote operator setting should be made effective with regard to the servo amplifier gain.

Warning: Please do not change the setting of this switch.

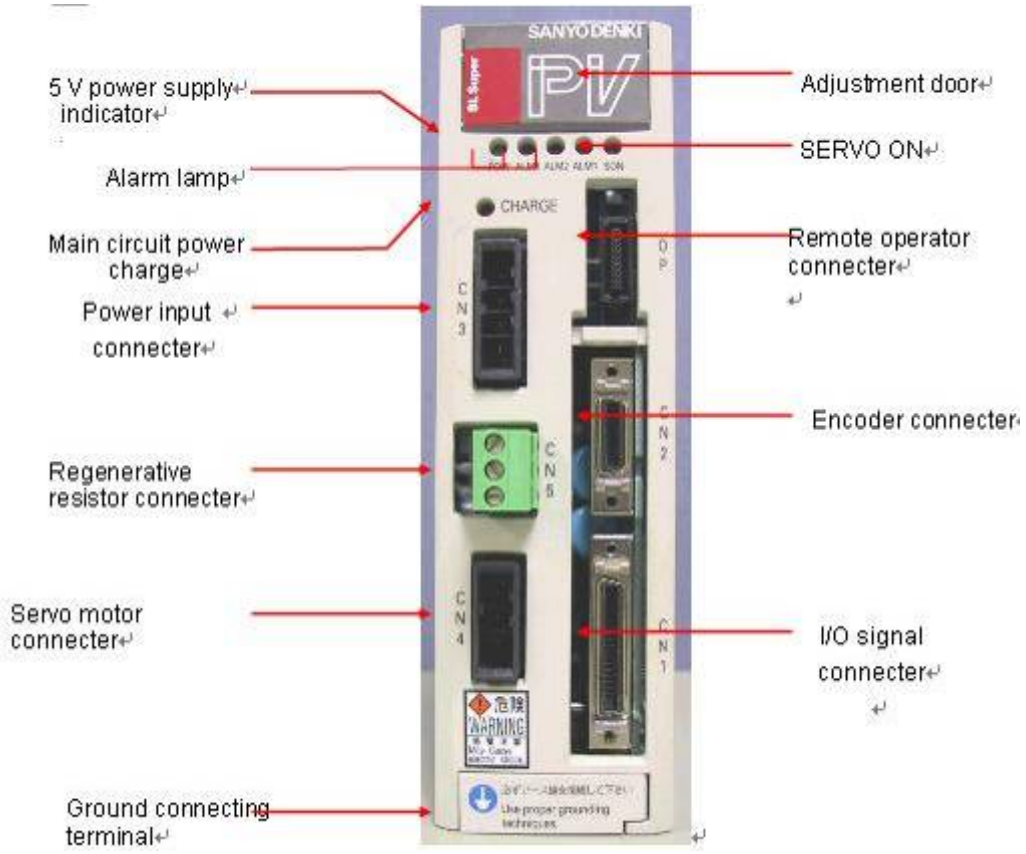

Notice: Below picture shows the important setting of Servo amplifier. Please DO NOT TRY to change any of the setting in this picture. It may cause malfunction of servo control of this axis.

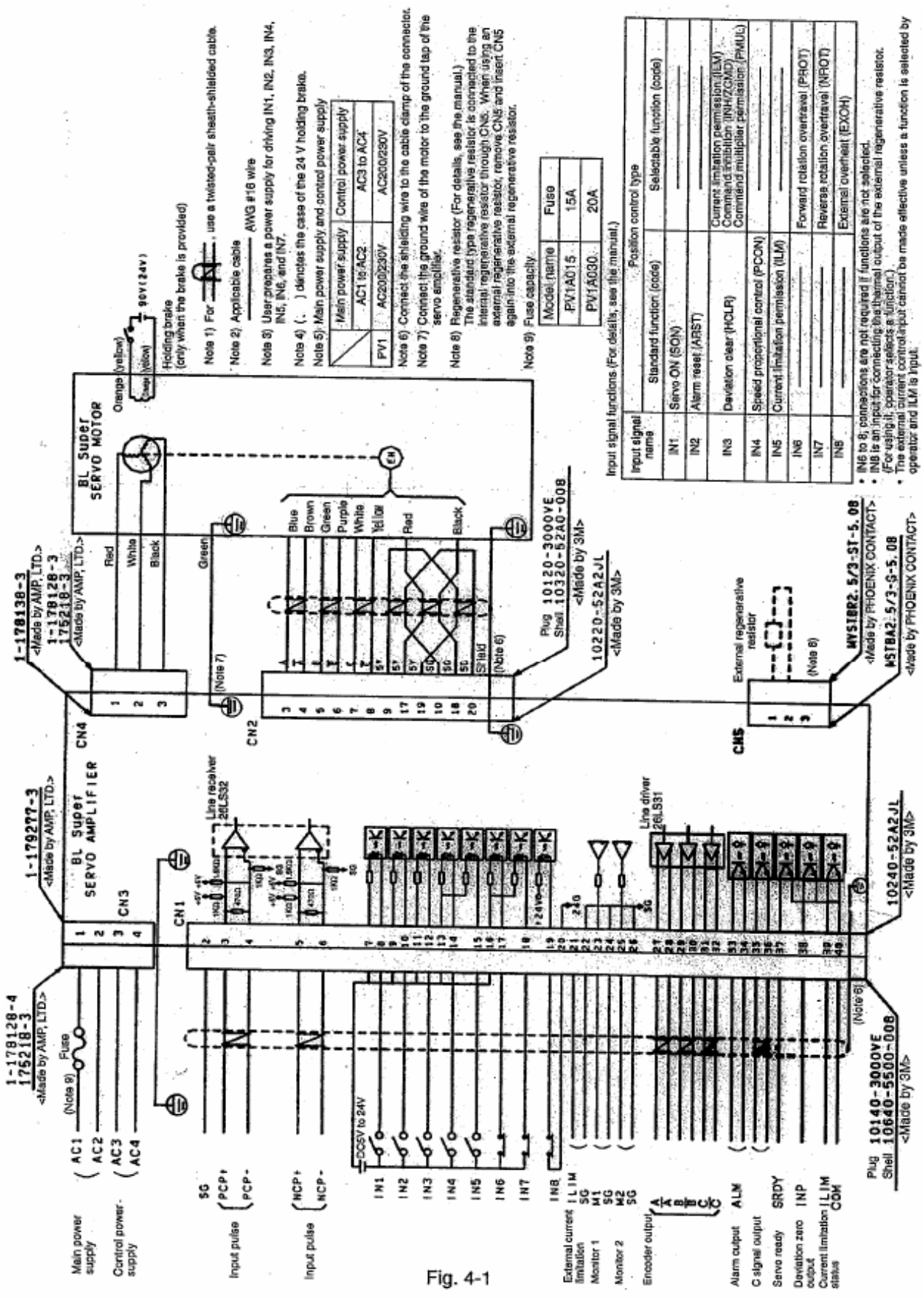

The wiring diagram of Servo pack

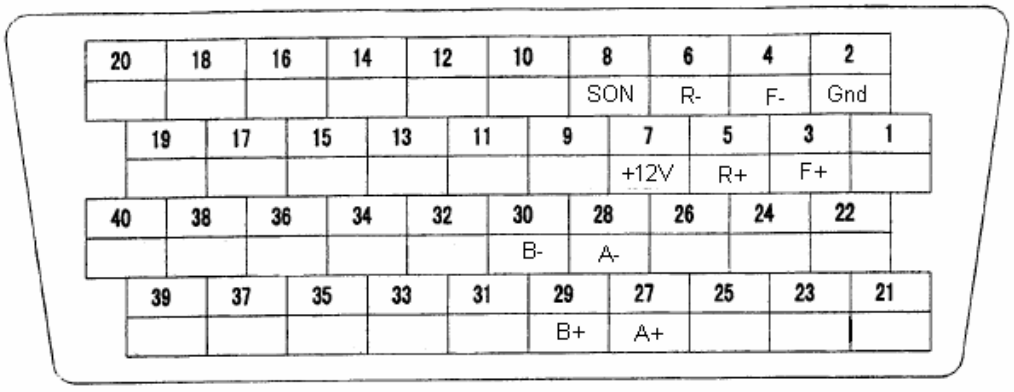

The wiring connection of CN1 of servo amplifier

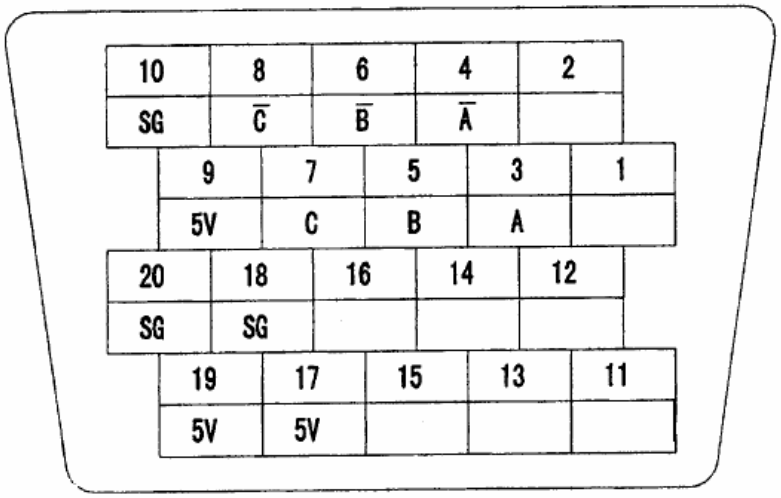

The wiring connection of CN2 of servo amplifier

2-5-3 Error Message Table For PV Type Servo Amplifier

Below messages were direct print out from the Sanyo Servo Pack Operation Manual for indicates the important information when engineer find the problem of servo system occurred.

The Sanyo Servo Pack was a close loop system. The servo amplifier take commends from LA50B SERVO PLC, and then the inner program of Sanyo amplifier will control the servo motor by PLC command. After the command fulfill, it feed back the current position of servo motor to LA50B SERVO PLC.
When any of the alarm LED on servo amplifier is ON. Please follow below servo troubleshooting chart to resolve the problem. The alarm will only affect by four parts: Servo amplifier; Servo motor; Motor encoder cable and motor power cable. Please follow the chart to check which part of the four is defective.

1) Troubleshooting

When an alarm occurs, the alarm output (ALM) will be output and the alarm lamp on the front panel will light up.

Take a proper measure listed in the following table according to the alarm lamp status.

Note 1: Before replacing the servo amplifier, check that there is no external factor.
(Prevention from double damage)

Note 2: An "O" in the alarm lamp denotes that it is lit.

Alarm No.	Alarm lamp			Abbreviation	Alarm name	Operating status	Cause	Corrective measure or action
	ALM4	ALM2	ALM1					
1			O	OC	Power element error (overcurrent)	The lamp lights up only by turning on the control power supply.	• Defective printed circuit board	• Replace the servo amplifier.
						After the main circuit power supply is turned on, the lamp lights up with Operation ready output signal ON.	• Defective printed circuit board	• Replace the servo amplifier.
						The lamp lights up with Servo ON.	• Defective motor ground.	• Replace the motor.
							• Defective power module	• Replace the servo amplifier.
							• Wrong wiring in the motor main circuit	• Correct the wiring.
						The lamp lights up when the motor starts or stops.	• Improper combination of motor and amplifier	• Combine motor and amplifier correctly.
2		O		OL	Overload	The lamp lights up only by turning on the control power supply.	• Defective printed circuit board	• Replace the servo amplifier.
						The lamp lights up during motor operation.	• The motor is operated over the rated torque.	• Correct the load.
							• The holding brake is not released.	• Release the brake by excitation.
						The motor rotates but no torque is provided. After a while, the lamp lights up during operation.	• Wrong wiring in the motor main circuit • Broken wire in the motor main circuit	• Correct the wiring.
							• Improper combination of motor and amplifier	• Correct the combination.
						The lamp lights up even below the rated torque.	• Defective printed circuit board	• Replace the servo amplifier.

Alarm No.	Alarm lamp			Abbreviation	Alarm name	Operating status	Cause	Corrective measure or action
	ALM4	ALM2	ALM1					
3		O	O	OS	Overspeed	The lamp lights up only by turning on the control power supply.	• Defective printed circuit board	• Replace the servo amplifier.
							• Defective encoder	• Replace the servo motor.
						The lamp lights up during motor operation.	• Speed command too large	• Change the command within the specification.
							• Defective encoder	• Replace the servo motor.
							• Defective wiring for encoder signals	• Correct the wiring.
						The lamp lights up when the motor starts or stops.	• Overshoot too large	• Reset the servo tuning function. • Moderate the start pattern.
							• Load inertia too large	• Change the load inertia within the specification.
				SE	Speed control error	The lamp lights up only by turning on the control power supply.	• Defective printed circuit board	• Replace the servo amplifier.
						The lamp lights up with Servo ON.	• The motor oscillates (vibrates).	• Do servo tuning. • Replace the servo amplifier. • Replace the servo motor.
						The lamp lights up with speed command input.	• Wrong wiring or wire breaking	• Correct the wiring.
4	O			DE	Sensor error	The lamp lights up only by turning on the control power supply.	• Defective motor encoder	• Replace the servo motor.
							• Wrong wiring or wire breaking for encoder signals	• Correct the wiring.
							• Defective printed circuit board	• Replace the servo amplifier.
							• Improper combination of motor and amplifier	• Combine motor and amplifier correctly.
						The lamp lights up when the motor moves slightly.	• Defective motor encoder	• Replace the servo motor.
							• Wrong wiring or wire breaking for encoder signals	• Correct the wiring.

Alarm No.	Alarm lamp			Abbreviation	Alarm name	Operating status	Cause	Corrective measure or action
	ALM4	ALM2	ALM1					
5	O		O	PE	Control power supply error	The lamp lights up only by turning on the control power supply.	• The input supply voltage is out of the specification range.	• Change the supply voltage within the specification.
							• Defective printed circuit board	• Replace the servo amplifier.
						The lamp comes on during motor operation.	• Input power variation too large	• Change the supply voltage within the specification.
				MPE	Main circuit power drop	The lamp lights up only by turning on the control power supply.	• Defective printed circuit board	• Replace the servo amplifier.
						The lamp lights up when the main circuit power supply is turned on.	• Supply voltage too low	• Change the supply voltage within the specification.
							• Rectifier damage	• Replace the servo amplifier.
						The lamp lights up when the main circuit power supply is turned on or off.	• The time to turn on or off the power supply is too late.	• Turn on or off the power supply immediately.
						The lamp lights up during motor operation.	• Input power variation too large	• Change the supply voltage within the specification.
							• Defective printed circuit board	• Replace the servo amplifier.
				OV	Overvoltage	The lamp lights up only by the control power supply.	• Defective printed circuit board	• Replace the servo amplifier.
						The lamp lights up when the main circuit power supply is turned on.	• Input supply voltage too high • Distorted input power waveform	• Change the supply voltage within the specification.
						The lamp lights up during motor operation.	• Load inertia too large	• Change the load inertia within the specification.

Alarm No.	Alarm lamp			Abbreviation	Alarm name	Operating status	Cause	Corrective measure or action
	ALM4	ALM2	ALM1					
5	O		O	EXOH	External overheating	The lamp lights up only by turning on the control power supply.	• Defective printed circuit board	• Replace the servo amplifier.
							• Wrong wiring or broken wire	• Correct the wiring.
							• Defective external thermal	• Replace the thermal.
						The lamp lights up during motor operation.	• External thermal operation	• Correct the operating conditions.
6	O	O		OVF	Deviation excess	The lamp lights up only by turning on the control power supply.	• Command pulse is input.	• Do not input command pulse, but input Deviation Clear.
							• Defective printed circuit board	• Replace the servo amplifier.
						The lamp lights up during motor operation.	• The set deviation excess is small.	• Correct the deviation excess or the position loop gain.
							• Inertia too large	• Check the inertia converted in terms of motor shaft again.
							• The motor is locked.	• Unlock the motor.
							• Defective wiring for encoder signals	• Correct the wiring.
							• High command frequency	• Lower the frequency.

Alarm No.	Alarm lamp			Abbreviation	Alarm name	Operating status	Cause	Corrective measure or action
	ALM4	ALM2	ALM1					
7	O	O	O	MEME	Memory error	The lamp lights up by turning on the control power supply.	• Defective printed circuit board	• Replace the servo amplifier.
							• Improper combination of motor and amplifier	• Combine motor and amplifier correctly.
							• Improper setting for command pulse type	• Set PM1 and PM0 to any value other than "1" and "1".
				DSPE	Servo processor error	The lamp lights up by turning on the control power supply.	• Defective printed circuit board • The 5 V power supply is lowered.	• Replace the servo amplifier.
							• Servo processor error	• Replace the servo amplifier.
						The lamp lights up during motor operation.	• Servo processor error • The 5 V power supply is lowered.	• Replace the servo amplifier.
				CPUE*	CPU error	The lamp lights up by turning on the control power supply.	• The 5 V power supply is lowered.	• Correct the wiring related to the encoder. • Replace the servo amplifier.
							• Defective printed circuit board	• Replace the servo amplifier.
							• Malfunction of internal circuit	• Turn off the control power supply, then turn it on again. ↓ If the same error recurs, replace the servo amplifier.

			CPUE*	CPU error	The lamp lights up by turning on the control power supply.	• The 5 V power supply is lowered.	• Correct the wiring related to the encoder. • Replace the servo amplifier.
						• Defective printed circuit board	• Replace the servo amplifier.
						• Malfunction of internal circuit	• Turn off the control power supply, then turn it on again. ↓ If the same error recurs, replace the servo amplifier.
					The lamp lights up during motor operation.	• The 5 V power supply is lowered.	• Correct the wiring related to the encoder. • Replace the servo amplifier.
						• Defective printed circuit board	• Replace the servo amplifier.
						• Malfunction of internal circuit	• Turn off the control power supply, then turn it on again. ↓ If the same error recurs, replace the servo amplifier.

Note: CPU error will not be recorded in the alarm history.
When the alarm output logic is set to ON at alarm (bit 7 of Func 1 = '1'), there is no alarm output upon occurrence of a CPU error.

2-5-3 Meaning of parameters in PV type amplifier

In this section will lead you to understand:

1. The meaning of parameters in servo amplifier.
2. When do you need to check the parameters
3. How to operate the Sanyo remote operator.

The below table of parameter setting is for your reference. The columns with blue color text are the changing from default setting of amplifier.

Mode 0 Parameters					
Page No.	Abbreviation	Name	X	Y	Z
0	Kp	Position loop gain	30	30	30
1	Kff	Feed forward gain	0	0	0
2	Kvp	Speed loop proportional gain	**200**	**200**	**100**
3	Tvi	Speed loop integral time constant	**20**	**25**	**10**
4	INP	Positioning completion signal width	64	64	64
5	OVF	Deviation excess	256	256	256
6	EGER	Electronic gear ratio	**25/1**	**10/1**	**5/1**
7	ENCR	Output pulse dividing ratio	**1/25**	**1/10**	**1/5**
9	PMOD	Position command pulse train type	**00000000**	**00000000**	**00000000**
10	UIF1	User I/F function selection 1	**10000000**	**10000000**	**10100000**
12	Func1	Selector switch1	00000000	00000000	00000000
13	Func2	Selector switch2	00000000	00000000	00000000
14	Func3	Selector switch3	00000000	00000000	00000000
15	Func4	Selector switch4	**00000000**	**00000000**	**00000000**
16	IILM	Internal current limitation	100	100	100
17	SILM	Sequence current limitation	120	120	120
18	FLPF	Feed forward LPF	990	990	990
19	VLPF	Speed command LPF	990	990	990
20	ILPF	Current command LPF	500	500	500
21	IBEF	Current command BEF	990	990	990
22	Tacc	Speed acceleration/deceleration time	0	0	0
23	TPcm	Position command acceleration/deceleration time constant	0	0	0
Mode 1 Parameters					
0	TYPE	Control mode	Position	Position	Position

When should you check amplifier parameter

If there is servo part problem happened in AutoLab system, it is recommended to check amplifier parameters before you replace any spare parts.

Recommended checking situation:
1. X/Y/Z axis crashing.
2. X/Y/Z axis runs in uneven speed.
3. Alarm light is “ON” on the panel of amplifier.

How to check PV type amplifier parameter

Use Sanyo Denki Amplifier encoder Model RP-001 to check amplifier parameters.

Switch “SW1” down to release write protect.
Notice: The default position of SW1 was set to down position. But please confirm this switch before you connect the remote operator.

Connect amplifier encoder to this socket by encoder cable.

When you connect amplifier and encoder, the encoder is powered automatically.

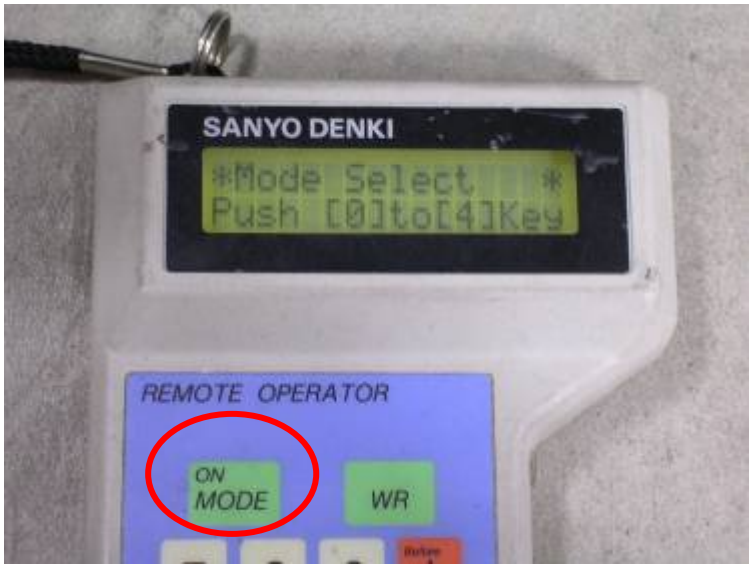

Press “Mode” key to enter mode select screen.

Press number key to enter “Mode” screen.

Press up/down key to change pages and press left/right key to move cursor in the page.

Follow “Amplifier parameter table” to check parameters.

If need to change parameter, move cursor to the position of number and press the number you want to change.
After changing, press “WR” key and “Completed” message will be showed on the display.

2-5-4 Sanyo Denki Q type amplifier

Name of Q type amplifier parts

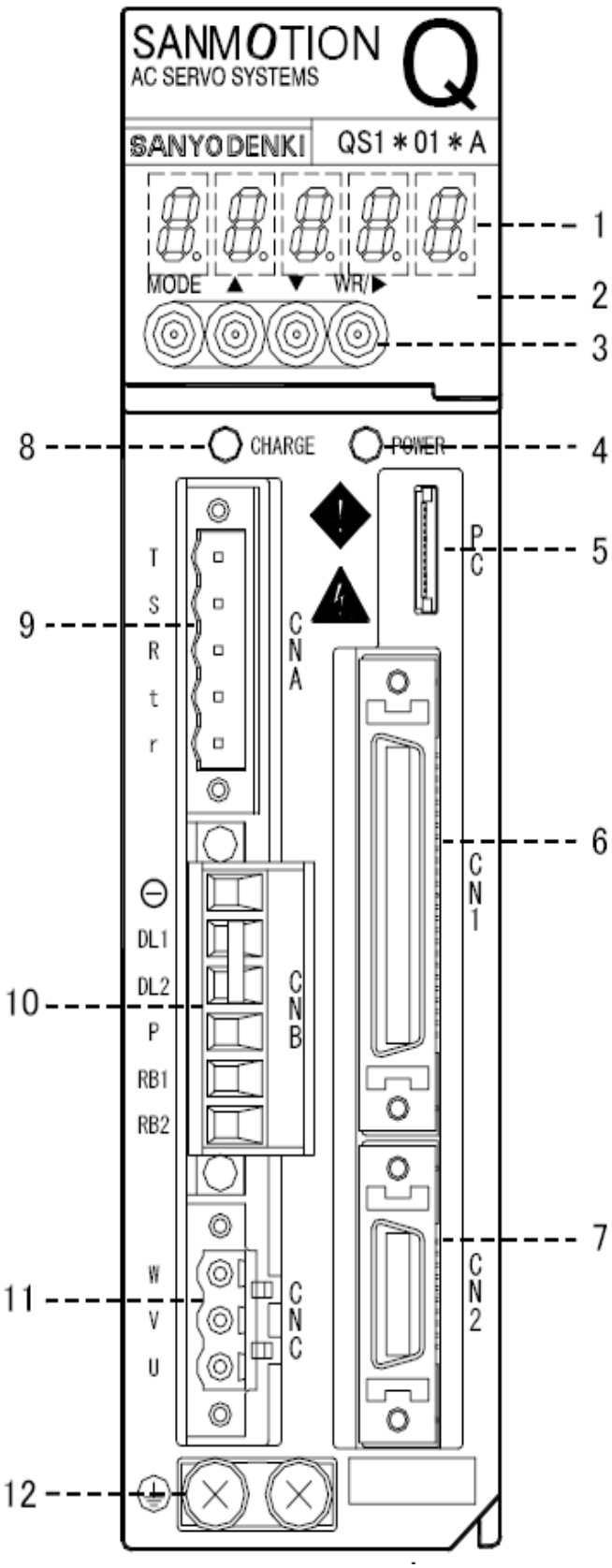

1. **5 figures display 7 segment LED**
   - LED for display of digital operator
2. **Digital operator**
   - Perform “Status display”, “Monitor”, Test operation and adjustment”, “Parameter editing” and “Alarm display”.
3. **Operation key**
   - Operation key of digital operator
4. **Control power supply set-up LED (POWER GREEN)**
   - Indicate the control power (r, t) is supplied and control power supply +5V is set up.
5. **Connector for connecting PC interface (PC)**
   - Used to perform “Status display”, “Monitor”, Test operation and adjustment”, “Parameter editing”, “Alarm display” and “Operation Wave form” by connecting PC interface (Q-Setup).
6. **Connector for general purpose input/output (CN1)**
   - Used for I/O signal of servo amplifier and upper unit (controller).
7. **Connector for sensor signal (CN2)**
   - Connects sensor signal line from servo motor.
8. **Main power charge LED (CHARGE RED)**
   - Indicate the voltage is charging to the smoothing capacity of main power.
9. **Control power and Main power input connectors (CNA)**
   - Connects the control cable to r and t terminals and the Main power to R, S and T
10. **Connector for external regenerative resistor and DC reactor (CNB)**
    - Connect an external regenerative resistor between RB1 and RB2 and DC reactor between DL1 and DL2. In case DC reactor is not used, make sure to short-circuit between DL1 and DL2.
11. **Servo motor power connector (CNC)**
    - Connect the servo motor power connector.
12. **Protective earth terminal**
    - Used for connecting protectively. Grounds an earth cable for class D.

External wiring diagram of Q type amplifier parts

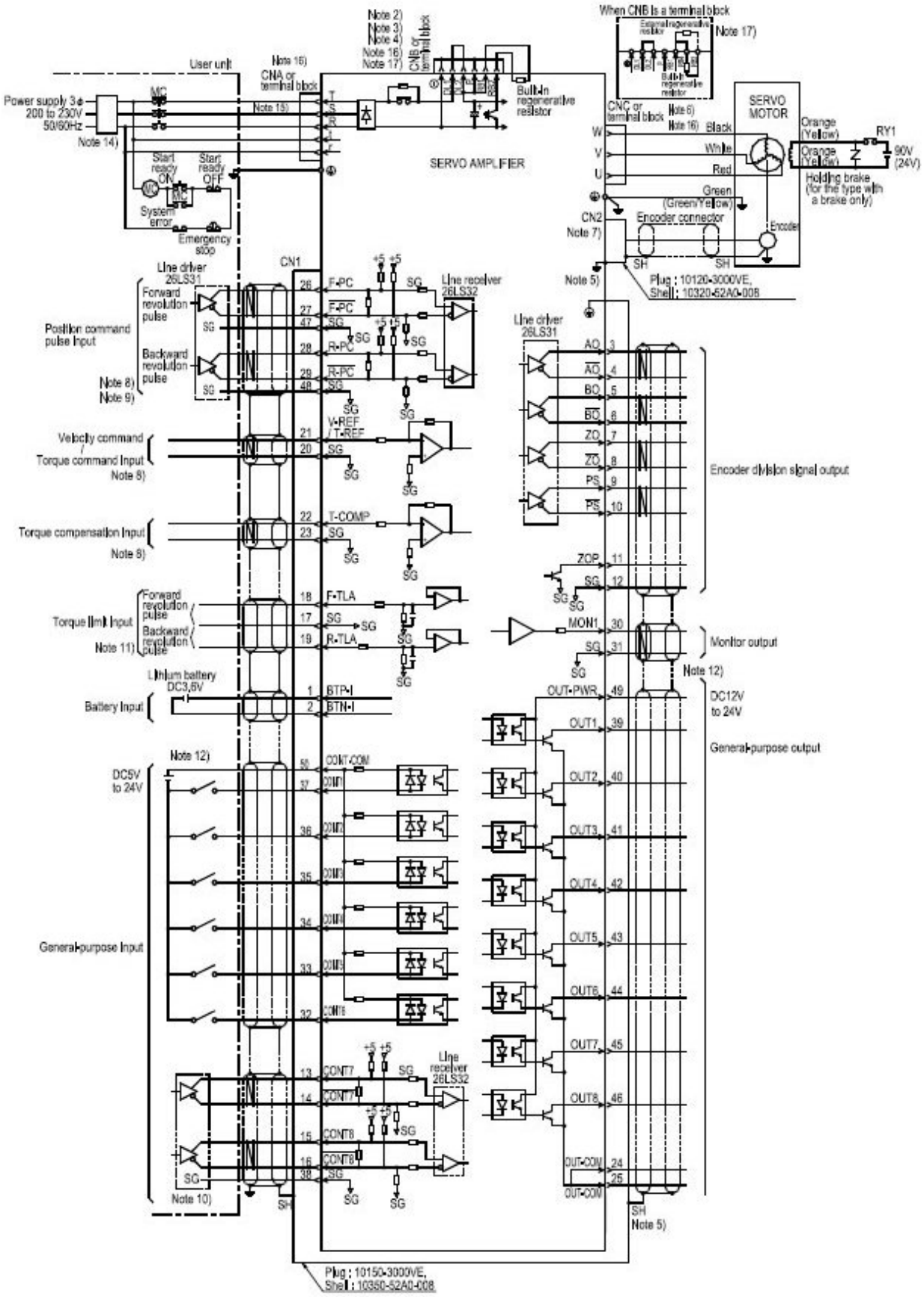

CN1 and CN2 wiring diagram of Q type amplifier parts

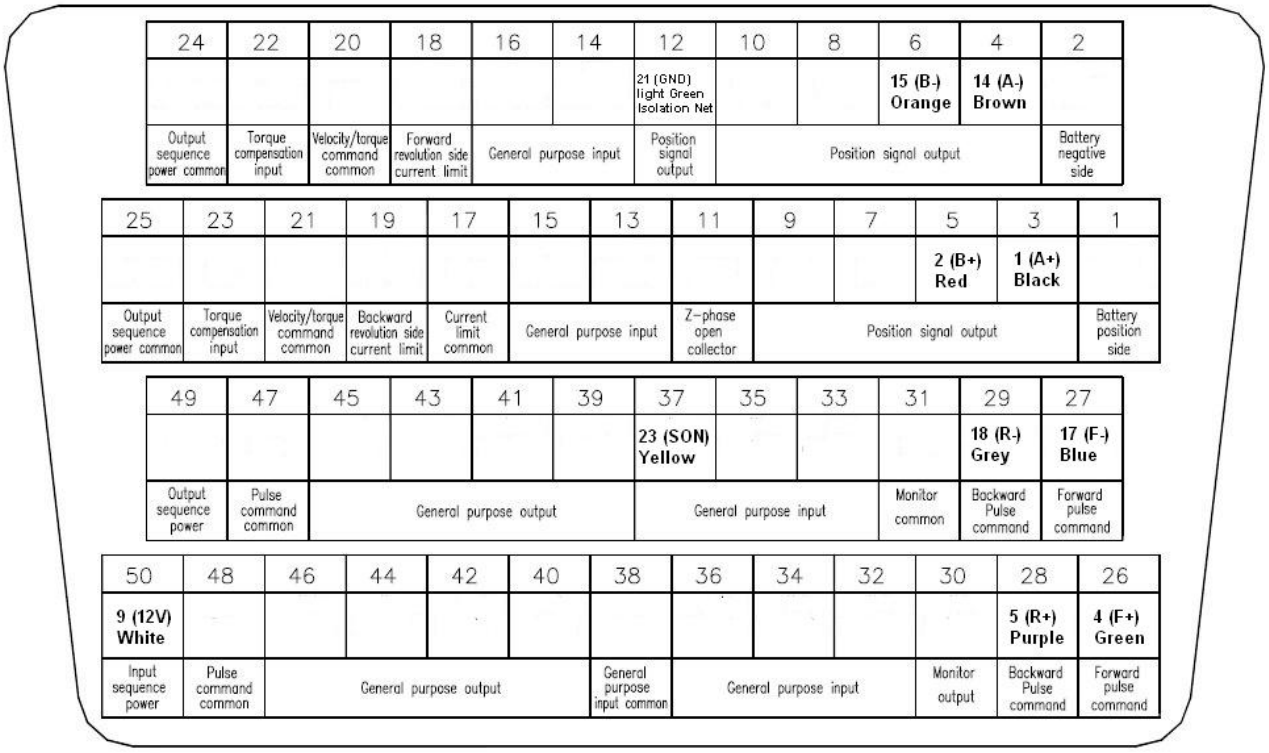

CN1 Connector Terminal Arrangement Diagram

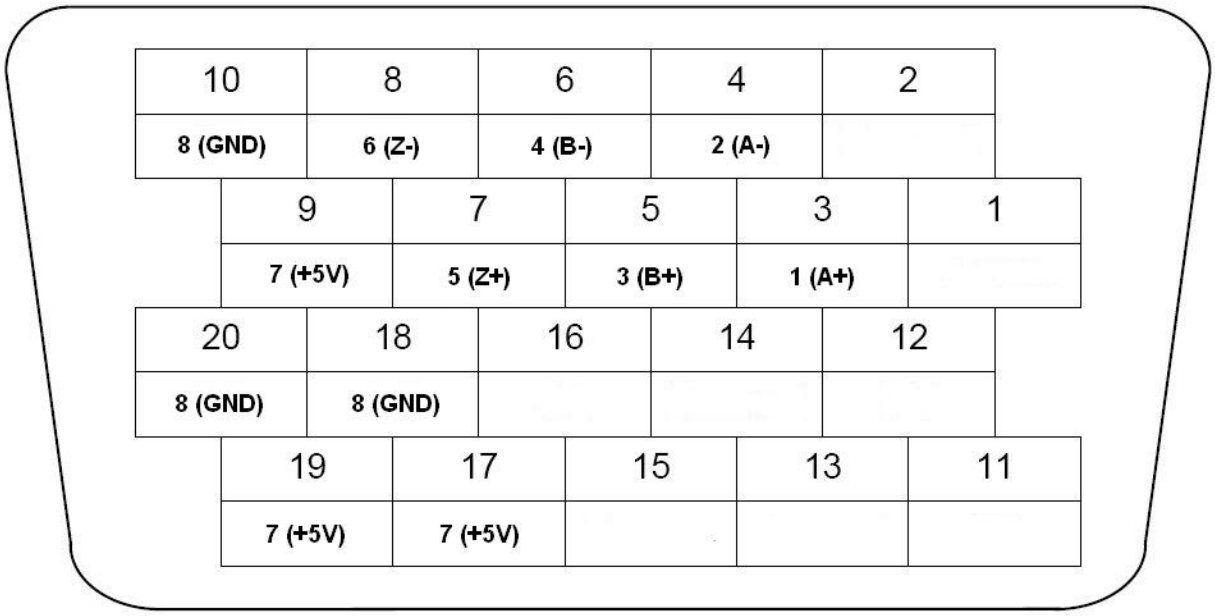

CN2 Connector Terminal Arrangement Diagram

Digital Operator (Parameter settings)

This section explains the basic operation of the digital operator. In Q series parameter change，monitoring of velocity and current，alarm trace，test operation, and adjustment of servo amplifier are enabled by using the digital operator built-in main body.

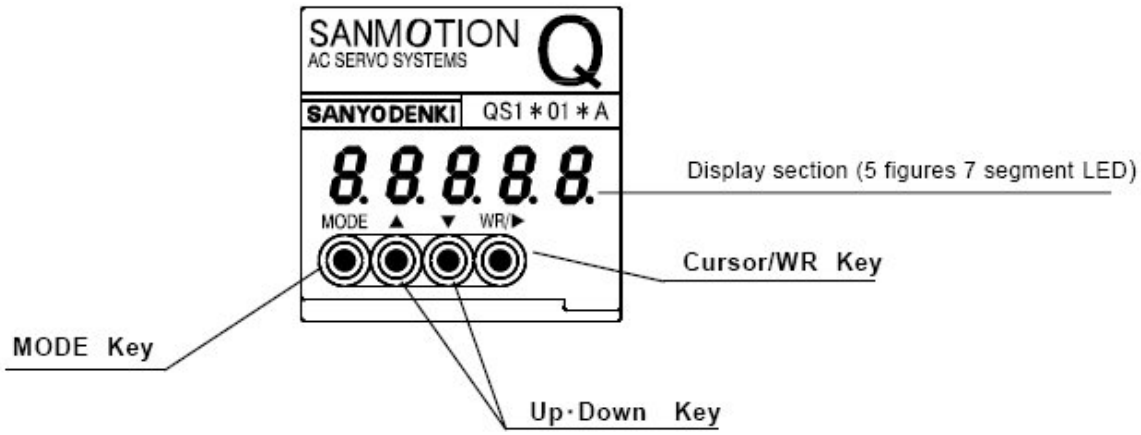

Function of input key			
Input key	**Display**	**Input time**	**Function**
WR	WR	1 second or more	Decide after selection and write the editing data
Cursor	►	Within 1 second	Change the cursor location. Every one press, move to selectable figure.
Down	▼	Within 1 second	Correspond to cursor location and the value change every one press. When pressing 1 second or more, the value changes by scrolling.
Up	▲	Within 1 second	
Mode	Mode	Within 1 second	Mode change every one push.

Function of digital operator		
Mode	**Display**	**Function**
Status Display	-	Display the status of servo amplifier.
Monitor	ob	Display various monitors on the screen.
Test operation, Adjustment	Ad	Allow test operation and adjustment of amplifier such as JOG operation.
Basic	bA	Set 16 kinds of user parameters.
Alarm trace	AL	Display the last seven and current alarms, and CPU version.
Parameter editing	PA	Set user parameters. (Group0 to Group9)
System parameter editing	ru	Set system parameters.

By pressing MODE key, MODE shifts as fllowing order.

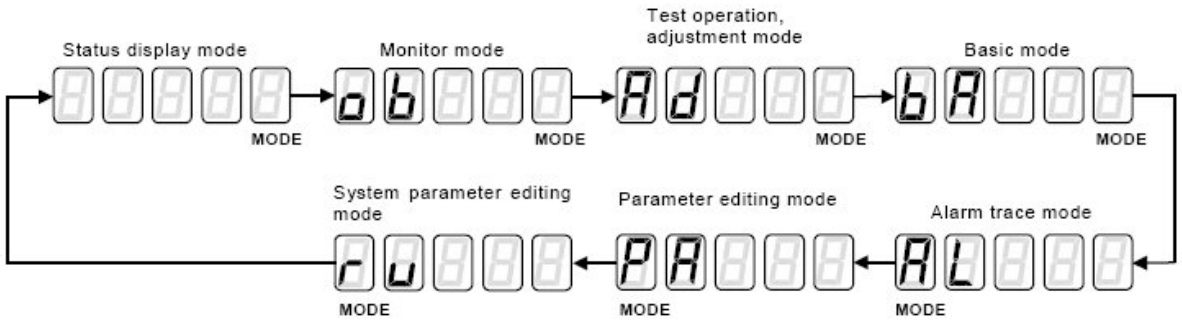

The procedures of changing Q type amplifier parameters

- By pressing MODE key, display system parameter editing mode “PA”.

- Switch as follows. (Page selection screen)

- Display the target page for editing by pressing UP/DOWN key. The value is increased by UP key and decrease by DOWN key.

【Group 0 Page 13: Torque command filter 1】

- Press WR key for 1 second. The setting data is indicated.
  By press MODE key, return to procedure 3 (page selection screen).

【Setting data: 600Hz】 ⇨ 【Changed data: 450Hz】

- By pressing cursor key within 1 second, the highest figure flickers. The value which is flickering can be edited. By pressing cursor key within 1 second, the next figure flickers. By pressing UP/DOWN key, set the value which is to be edited.

- By pressing WR key for 1 second or more, the display flickers 3 times and the flicker stops. This means that the data can be set.

【Changed data: 450Hz】

*** When save data out of setting range, display the data before editing without flickering 3 times. Reset in procedure 5.**

- By press MODE key again, return to procedure 3. By pressing MODE key once again, the mode shifts.

Q type amplifier factory setting parameters

Group	Page	Parameter level	Symbol	Description	Standard value	Unit	Setting range	Remarks
0	00	Basic	KP1	Position Loop Proportional Gain 1	30	1/s	1 to 3000	
	01	Advanced	TPI1	Position Loop Integral Time Constant 1	1000.0	ms	0.5 to 1000.0	
	02	Basic	KVP1	Velocity Loop Proportional Gain 1	50	Hz	1 to 2000	
	03	Basic	TVI1	Velocity Loop Integral Time Constant 1	20.0	ms	0.5 to 1000.0	
	04	Basic	KP2	Position Loop Proportional Gain 2	30	1/s	1 to 3000	
	05	Advanced	TPI2	Position Loop Integral Time Constant 2	1000.0	ms	0.5 to 1000.0	
	06	Basic	KVP2	Velocity Loop Proportional Gain 2	50	Hz	1 to 2000	
	07	Basic	TVI2	Velocity Loop Integral Time Constant 2	20.0	ms	0.5 to 1000.0	
	08	Basic	JRAT1	Load Inertia Ratio 1	100	%	0 to 15000	
	09	Basic	JRAT2	Load Inertia Ratio 2	100	%	0 to 15000	
	0A	Basic	FFGN	Feed Forward Gain	0	%	0 to 100	
	0C	Basic	TVCACC	Velocity Command, Acceleration Time Constant	0	ms	0 to 16000	
	0D	Basic	TVCDEC	Velocity Command, Deceleration Time Constant	0	ms	0 to 16000	
	0E	Standard	PCFIL	Position Command Filter	0.0	ms	0.0 to 2000.0	
	0F	Standard	FFFIL	Velocity Feed Forward Filter	2000	Hz	1 to 2000	
	10	Standard	VCFIL	Velocity Command Filter	2000	Hz	1 to 2000	
	11	Standard	TCNFILA	Torque Command Notch Filter A	2000	Hz	100 to 2000	Note1
	12	Standard	TCNFILB	Torque Command Notch Filter B	2000	Hz	100 to 2000	Note1
	13	Standard	TCFIL1	Torque Command Filter 1	600	Hz	1 to 2000	
	14	Standard	TCFIL2	Torque Command Filter 2	600	Hz	1 to 2000	

Q type amplifier factory setting parameters (Cont…)

Group	Page	Parameter level	Symbol	Description	Standard value	Unit	Setting range	Remarks
1	00	Basic	INP	In-Position Window	100	Pulse	1 to 65535	
	01	Basic	NEAR	In-Position Near Range	500	Pulse	1 to 65535	
	02	Basic	OFLV	Following Error Limit	1500	x256 pulse	1 to 65535	
	03	Basic	PMUL	Position Command, Pulse Multiplier	1	–	1 to 63	
	04	Basic	GER1	Electric Gear Ratio 1	1/1	–	1/32767 to 32767/1	
	05	Advanced	GER2	Electric Gear Ratio 2	1/1	–	1/32767 to 32767/1	
	06	Basic	ENRAT	Encoder Output Pulse Divide Ratio	1/1	–	1/8192 to 1/1	Note1
	07	Basic	LOWV	Low Speed Range (LTG)	50	min-1	0 to 65535	
	08	Basic	VA	High Speed Range (HTG)	1000	min-1	0 to 65535	
	09	Basic	VCMP	Speed Matching Width (SPE)	50	min-1	0 to 65535	
	0A	Basic	VC1	Preset Velocity Command 1	100	min-1	0 to 65535	
	0B	Basic	VC2	Preset Velocity Command 2	200	min-1	0 to 65535	
	0C	Basic	VC3	Preset Velocity Command 3	300	min-1	0 to 65535	
	0D	Standard	VCLM	Velocity Limit	65535	min-1	1 to 65535	Note2
	0E	Basic	TCLM	Internal Torque Limit	100	%	10 to 500	Note3
	0F	Basic	SQTCLM	Torque Limit at Sequence operation	120	%	10 to 500	Note3
	10	Basic	BONDLY	Delay Time of Engaging Holding Brake	300	ms	1 to 1000	
	11	Basic	BOFFDLY	Delay Time of Releasing Holding Brake	300	ms	1 to 1000	
	12	Standard	VCGN	Analog Velocity Command Reference	500	min-1/V	0 to 6000	
	14	Standard	TCGN	Analog Torque Command Reference	50	%/V	0 to 500	
	16	Standard	TCOMPGN	Analog Torque Compensation Command, Reference	50	%/V	0 to 500	
	17	Standard	TCOMP	Reset Torque Compensation Command	0	%	-500 to 500	
	18	Standard	VCOMP	Reset Velocity Compensation command	0	min-1	-32768 to 327687	
	19	Standard	BONBGN	Brake operation Beginning Time	1000	ms	0 to 65535	
	1A	Standard	ZV	Speed Zero Range	50	min-1	0 to 500	
	1B	Advanced	PFDDLY	Power Failure Detection Delay Time	32	ms	20 to 1000	Note4
	1C	Standard	OLWLV	Overload Warning Level	90	%	0 to 100	Note4
	1D	Standard	OFWLV	Following Error Warning Level	65535	x256 pulse	1 to 65535	
	20	Advanced	INCEDAT	Incremental Encoder, Count Error Level	128	Pulse	1 to 65535	
	21	Standard	JOGVC	JOG Velocity Command	50	min-1	0 to 32767	
	22	Standard	ATNFIL	Automatic Notch Filter Tuning, Torque Command Amplitude	50	%	10 to 300	Note3

Group	Page	Parameter level	Symbol	Description	Standard value	Unit	Setting range	Remarks
2	00	Advanced	OBLPF1	Observer Output, Low Pass Filter 1	200	Hz	1 to 2000	
	01	Advanced	OBLPF2	Observer Output Low Pass Filter 2	16	Hz	1 to 2000	
	02	Advanced	OBG	Observer Compensation Gain	0	%	0 to 1000	
	03	Advanced	ANRES	Anti-Resonance Frequency	40	Hz	10 to 200	
	07	Advanced	RTLEVEL	Real Time Automatic Tuning Level	0		0 to 10	

Q type amplifier factory setting parameters (Cont…)

Group	Page	Parameter level	Symbol	Description			Standard value	Remarks
				Parameter name	Upper	Lower		
3	00	Basic	PA300	Function Switch 300	Deviation Clear Selection	Position Command Pulse, Digital Filter	00h	
	01	Basic	PA301	Function Switch 301	Encoder Pulse Divided Output Polarity	Encoder Pulse Divided Output Switching	00h	
	02	Basic	PA302	Function Switch 302	Command Input Polarity	P-PI Automatic Switching Function	00h	
	03	Basic	PA303	Function Switch 303	Torque Limit Input	Speed Feedback Error Dectection / Speed Control Error Detection	01h	
	04	Basic	PA304	Function Switch 304	Over-Travel Operation	Dynamic Brake Operation	04h	
	05	Basic	PA305	Function Switch 305	Analog Monitor Output Polarity	Emergency Stop Operation	00h	
	06	Standard	PA306	Function Switch 306	Velocity Compensation Command Input	Torque Compensation Command Input	00h	
	07	Advanced	PA307	Function Switch 307	Absolute Encoder Clear Function Selection	In-Position Signal / Position Deviation Monitor	00h	
	08	Advanced	PA308	Function Switch 307	External Incremental Encoder, Digital Filter	Motor Incremental Encoder, Digital Filter	11h	

Group	Page	Parameter level	Symbol	Description			Standard value	Remarks
				Parameter name	Upper	Lower		
4	00	Basic	PA400	Function Switch 400	Command Pulse Train Form Selection	Command pulse input polarity	00h	Note1
	01	Basic	PA401	Function Switch 401	Reserved	External Encoder Polarity	00h	Note1
	02	Basic	PA402	Function Switch 402	Setup Software, Communication Baud Rate	Setup Software, Communication Axis Number	51h	Note1
	03	Basic	PA403	Function Switch 403	Reserved	Positioning Method	00h	Note1
	04	Standard	PA404	Function Switch 404	Reserved	Encoder Signal Output (PS), Format Selection	00h	Note1

Group	Page	Parameter level	Symbol	Description	Standard value	Setting range	Remarks
5	00	Basic	MON1	Analogue Monitor 1, Output Signal Selection	02:VMON_2mV/min-1	00h to 0Ah	
	01	Basic	MON2	Analogue Monitor 2, Output Signal Selection	01:TCMON_2V/TR	00h to 0Ah	

Group	Page	Parameter level	Symbol	Description	Standard value	Setting range	Remarks
6	00	Advanced	PA600	Observer Function Selection	00: OFF	00h to 02h	
	01	Advanced	PA601	Function Switch 601	High 0: Reserved Low 0: Real time auto-tuning function is ineffective		
	02	Advanced	PA606	Function Switch 606	High 0: Reserved Low 1: Secondary low pass filter		

Group	Page	Parameter level	Symbol	Description	Standard value	Setting range	Remarks
7	00	Basic	CLR	Deviation Clear Function	08:_CONT4_ON	00h to 1Fh	
	01	Basic	MS	Control Mode Switching Function	00:_Always_Ineffect	00h to 1Fh	
	02	Basic	PCON	Velocity Loop Proportional Control, Switching Function	04:_CONT2_ON	00h to 1Fh	
	03	Basic	GC	Gain Switching Function	00:_Always_Ineffect	00h to 1Fh	

Q type amplifier factory setting parameters (Cont…)

Group	Page	Parameter level	Symbol	Description	Standard value	Setting range	Remarks
8	00	Basic	S-ON	SERVO-ON Function	02:_CONT1_ON	00h to 1Fh	
	01	Basic	AL-RST	Alarm Reset Function	10:_CONT8_ON	00h to 1Fh	
	02	Basic	TL	Torque Limit Function	0E:_CONT7_ON	00h to 1Fh	
	03	Basic	ECLR	Absolute Encoder Clear Function	06:_CONT3_ON	00h to 1Fh	
	04	Basic	F-OT	Positive Over-Travel Function	0D:_CONT6_ON	00h to 1Fh	
	05	Basic	R-OT	Negative Over-Travel Function	0B:_CONT5_ON	00h to 1Fh	
	06	Basic	INH/Z-STP	Position Command Pulse Inhibit Function Velocity Command Zero Clamp Function	00:_Always_Ineffect	00h to 1Fh	
	07	Basic	EXT-E	External Error Input	00:_Always_Ineffect	00h to 1Fh	
	08	Advanced	DISCHARGE	Main Power Discharge Function	01:_Always_Effective	00h to 1Fh	
	09	Basic	EMR	Emergency Stop Function	00:_Always_Ineffect	00h to 1Fh	
	0A	Basic	SP1	Preset Velocity Command Select Input 1	00:_Always_Ineffect	00h to 1Fh	
	0B	Basic	SP2	Preset Velocity Command Select Input 2	00:_Always_Ineffect	00h to 1Fh	
	0C	Basic	SP-ACC	Preset Velocity Command, Acceleration Setting	00:_Always_Ineffect	00h to 1Fh	
	0D	Basic	DIR	Preset Velocity Command, Direction of Rotation	00:_Always_Ineffect	00h to 1Fh	
	0E	Basic	RUN	Preset Velocity Command, Operation Start Signal Input	00:_Always_Ineffect	00h to 1Fh	
	0F	Basic	RUN-F	Preset Velocity Command, Positive Move Signal Input	00:_Always_Ineffect	00h to 1Fh	
	10	Basic	RUN-R	Preset Velocity Command, Negative Move Signal Input	00:_Always_Ineffect	00h to 1Fh	
	11	Advanced	GERS	Electric Gear Switching Function	00:_Always_Ineffect	00h to 1Fh	
	12	Advanced	PPCON	Position Loop Proportional Control, Switching Function	01:_Always_Effective	00h to 1Fh	
	14	Standard	TCOMPS	Torque Compensation Function	00:_Always_Ineffect	00h to 1Fh	
	15	Standard	VCOMPS	Velocity Compensation Function	00:_Always_Ineffect	00h to 1Fh	

Group	Page	Parameter level	Symbol	Description	Standard value	Setting range	Remarks
9	00	Basic	OUT1	General Purpose Output 1	18:_INP_ON	00h to 4Dh	
	01	Basic	OUT2	General Purpose Output 2	0C:_TLC_ON	00h to 4Dh	
	02	Basic	OUT3	General Purpose Output 3	02:_S-RDY_ON	00h to 4Dh	
	03	Basic	OUT4	General Purpose Output 4	0A:_MBR_ON	00h to 4Dh	
	04	Basic	OUT5	General Purpose Output 5	33:_ALM5_OFF	00h to 4Dh	
	05	Basic	OUT6	General Purpose Output 6	35:_ALM6_OFF	00h to 4Dh	
	06	Basic	OUT7	General Purpose Output 7	37:_ALM7_OFF	00h to 4Dh	
	07	Basic	OUT8	General Purpose Output 8	39:_ALM_OFF	00h to 4Dh	

The parameters for AutoLab TF system

The parameters listed below are the settings for TF systems. Others are the same as factory setting.

X axis				
Group	**Page**	**Name**	**TF setting**	**Factory setting**
0	02	KVP1	100 hz	50 hz
1	00	INP	64	100
1	04	GER1	25/1	1
1	06	ENRAT	1/25	1
8	00	S-ON	01:_always_enable	02:_cont1_on
8	04	F-OT	0C:_cont6_om	0D:_cont6_off
8	05	R-OT	0A:_cont5_on	0B:_cont5_off

Y axis				
Group	**Page**	**Name**	**TF setting**	**Factory setting**
0	02	KVP1	100 hz	50 hz
1	00	INP	64	100
1	04	GER1	10/1	1
1	06	ENRAT	1/10	1
8	00	S-ON	01:_always_enable	02:_cont1_on
8	04	F-OT	0C:_cont6_om	0D:_cont6_off
8	05	R-OT	0A:_cont5_on	0B:_cont5_off

Z axis				
Group	**Page**	**Name**	**TF setting**	**Factory setting**
0	02	KVP1	50 hz	50 hz
1	00	INP	64	100
1	04	GER1	5/1	1
1	06	ENRAT	1/5	1
8	00	S-ON	01:_always_enable	02:_cont1_on
8	04	F-OT	0C:_cont6_om	0D:_cont6_off
8	05	R-OT	0A:_cont5_on	0B:_cont5_off

Q type amplifier trouble shooting

■ Alarm Code 21H (Power module error (over current))

Operating state when alarm occurred

Operating state	Possible causes			
	1	2	3	4
When control power supply is turned on	Low		High	Low
When servo ON is input	High	High	High	
When motor is started or stopped	Low	Low	Low	
After operating for a short period	Low	Low	Low	High

Corrective measures

	Causes	Corrective measures
1	U, V, W phases of wiring between amplifier and motor are short-circuited or grounded.	Check wiring between amplifier and motor. Correct or replace wiring.
2	U, V, W phases of servomotor are short-circuited or grounded.	Replace servomotor.
3	Faulty PC board Faulty power module	Replace amplifier.
4	Power module (IPM) overheat is detected.	• Check if cooling fan in amplifier is rotating. Replace amplifier if fan is not operating. • Check if temperature of control board (ambient temperature of amplifier) is exceeding 131°F (55°C). If exceeding, review installation and cooling methods of amplifier to ensure temperature stays below 131°F (55°C).

■ Alarm Code 22H (Current F/B error 0)

Operating state when alarm occurred

Operating state	Possible causes	
	1	2
When control power supply is turned on	High	Low
After operating for a short period	Low	High

Corrective measures

	Cause	Corrective measures
1	• Faulty PC board • Faulty power module	• Replace amplifier
2	• Incorrect combination of amplifier and motor	• Check if servomotor conforms to motor code. Replace with correct motor if necessary.

■ Alarm Code 23H (Current F/B error 1)
■ Alarm Code 24H (Current F/B error 2)

Operating state when alarm occurred

Operating state	Possible causes	
	1	2
When control power supply is turned on	High	
During operation	Low	High

Corrective measures

Cause		Corrective measures
1	Faulty internal circuit of Servo Amplifier	Replace amplifier.
2	• Malfunction caused by noise	• Check that amplifier earth cable should be correctly grounded. • Add ferrite core as a counter measure against noise.

■ Alarm Code 41H (Overload 1)

Operating state when alarm occurred

Operating state	Possible causes								
	1	2	3	4	5	6	7	8	9
When control power supply is turned on	H								
When servo ON is inputted	H	H							H
After position command input (when motor is not rotating)		H			H	H	H		H
After position command input (after operating for a short period)			H	H	H		L	H	

Corrective measures

Cause		Corrective measures
1	Faulty amplifier control board or power module	Replace servo amplifier.
2	Faulty servomotor encoder circuit	Replace servomotor.
3	Effective torque exceeds rated torque	• Monitoring torque generated by motor using the estimated effective torque (Trms) to check if effective torque is exceeding rated torque. • Or, calculate effective torque of motor from the load and operating conditions → If effective torque is higher than rated torque, review operating or load conditions, or replace with larger capacity motor.
4	Incorrect combination of amplifier and motor.	• Check if motor code conforms to servomotor. Correct if necessary.
5	Holding brake of servomotor is not released	Check brake wiring for errors. Replace servomotor if brake wiring is found to be correct (and voltage is applied as specified),
6	Incorrect wiring of U, V, W phases between amplifier and motor	Check wrong wiring and correct it.
7	One or all of the U, V, W phase wirings between amplifier and motor is disconnected	Check wrong wiring and correct it.
8	Mechanical interference	Review operating conditions and limit switch.
9	Encoder pulse number setting does not meet motor	Make it meet encoder pulse number of motor.

In case of alarm cause #3, repeatedly turning the control power OFF→ON may cause the servomotor to burn.

After eliminating this above cause, turning off the power supply, and sufficient time passes over (30 minutes or more), reoperate.

■ Alarm Code 43H (Regenerative error)

See Regenerative resistor selection (8.4 system parameter in Page 8-27) and confirm that the actual wiring matches the contents.

Operating state when alarm occurred

Operating state	Possible causes							
	1	2	3	4	5	6	7	8
When control power supply is turned on							H	
When main circuit power supply is turned on						H	H	H
During operation	H	H	H	H	H		L	

Corrective Measures

	Cause	Corrective measures
1	• Allowable regeneration power of built-in regenerative resistor is exceeded. • Load inertia is too large, or conducted time (for one cycle) is too short	Review the load inertia and the operational pattern • Use an external regenerative resistor module. • Smaller load inertia within specified range • Increase deceleration time • Increase conducted time
2	Built-in regenerative resistor module is specified, but faulty wiring.	Check wrong wiring and correct it.
3	Though external regenerative resistor module is specified, wiring is incorrect.	Check wrong wiring and correct it.
4	Faulty regenerative resistor.	• Replace servo amplifier if using built-in regenerative resistor module. • Replace resistor if using external regenerative resistor module.
5	Resistance value of external regenerative resistor module is too large	Change to resistor that meets specification.
6	Input power voltage is over specification.	Review input power voltage
7	Faulty amplifier control circuit	Replace servo amplifier.
8	• Though selecting "Using external regenerative resistor (02)" in Page 0E of System Parameter Regenerative resistor selection, it is not equipped.	• Equip an external regenerative resistor. • Specify "Regenerative resistor is not connected".

For the setting that internal or external regenerative resistor is used, detect regenerative error if it is not actually connected.
For the setting that regenerative resistor is not used, regenerative error is not detected when it is actually connected. In other words that may damage or burn the amplifier and its peripheral circuit.

■ Alarm Code 51H (Amplifier Temperature Error)

Operating state when alarm occurred

Operating state	Possible causes				
	1	2	3	4	5
When control power supply is turned on	Low		High	Low	
During operation	Low	High	High	High	
After emergency stoppage					High

Corrective measures

Cause		Corrective measures
1	Faulty internal circuit of Servo Amplifier	Replace amplifier.
2	Regenerative power is too large	• Review operational conditions • Use external regenerative resistor
3	Although regenerative power is within specification, ambient temperature of Servo Amplifier is out of specification.	Review cooling method so that temperature in control board is from 32°F (0°C) to 131°F (55°C).
4	Though regenerative power is within specification, the cooling fun in Servo Amplifier stops.	• Check if the cooling fan in amplifier is rotating. Replace the amplifier if fan is not operating.
5	Regenerative power when emergency stoppage was too large.	• Replace Amplifier • Review load condition

Detect the error by amplifier internal temperature regardless of ambient temperature. If warning of amplifier ambient temperature is detected, make sure to review the cooling method in the control board.

■ Alarm Code 53H (DB overheat)

Operating state when alarm occurred

Operating state	Possible causes	
	1	2
When control power supply is turned on	High	
During operation	Low	High

Corrective measures

Cause		Corrective measures
1	Faulty amplifier internal circuit	Replace servo amplifier
2	• DB operating frequency is too high.	Use the dynamic brake without exceeding its allowable frequency by referring to 9.1.8.

■ Alarm Code 54H (Internal overheat)

Operating state when alarm occurred

Operating state	Possible causes		
	1	2	3
When control power supply is turned on	Low		High
During operation	Low	High	High

Corrective measures

Cause		Corrective measures
1	Faulty amplifier internal circuit	Replace servo amplifier
2	Regenerative power is too large.	• Confirm the specified capacity of internal regenerative resistor. • Operate under the condition that regenerative electric power is below the specified capacity. • Use an external regenerative resistor.
3	• Faulty wiring of built-in regenerative resistor	• Check wrong wiring and correct it.

When using regenerative resistor built in Servo Amplifier, as Regenerative Resistor type set "built-in regenerative resistor" to the amplifier exactly.
With this setting, it is decided that overheat protecting detection of built-in regenerative resistor is effective or ineffective. In case "no regenerative resistor connection or external regenerative resistor is selected, overheat detection of built-in regenerative resistor will not function.

Regenerative resistor which is built in the amplifier of 15A or 30A does not have a thermostat. Detect the error by estimating from regenerative load ratio.

■ Alarm Code 55H (External error)

Checking The Selection of Active Condition under the external trip function (See 8-5-9 Group 8 Parameter in page 8-55), confirm if the external trip function is active, and also which input is used.

Confirm what function is used for the general purpose input terminal in validity when external trip is activated.

● When connect external regenerative thermal

Operating state when alarm occurred

Operating state	Possible causes		
	1	2	3
When control power supply is turned on	High		Low
After operating for a short period		High	Low

Corrective measures

Cause		Corrective measures
1	Incorrect wiring of external regenerative resistor.	Check wrong wiring and correct it.
2	External thermal terminal (external regenerative resistor) operated.	• Review operational conditions. • Increase capacity of external regenerative resistor
3	Faulty servo amplifier control board	Replace servo amplifier

● When connect output terminal of upper system

Remove alarm causes in upper system.

■ Alarm Code 61H (Over voltage)

Operating state when alarm occurred

Operating state	Possible causes			
	1	2	3	4
When control power supply is turned on	High			
When main circuit power supply is turned on	High	High		
When motor is started or stopped		Low	High	High

Corrective measures

Cause		Corrective measures
1	Faulty amplifier control board	Replace servo amplifier.
2	Power voltage of main circuit is exceeding allowable voltage	Reduce voltage to within allowable range.
3	Load inertia is too large.	Reduce load inertia to within allowable range.
4	• Faulty wiring of connector CND, or • Inner regenerative circuit does not function.	• Wiring regenerative resistor correctly: Connect regenerative resistor wires to P and Y terminals of connector CND. When external regenerative resistor is used, check wiring and resistance value. Replace Servo Amplifier if malfunction persists.

■ Alarm Code 62H (Main circuit short voltage)

Operating state when alarm occurred

Operating state	Possible causes				
	1	2	3	4	5
When control power supply is turned on				High	Low
After main circuit power supply is turned on	High	High			
During motor operation (alarm can be reset)		Low	High		
During motor operation (alarm can not be reset)		High			

Corrective measures

Cause		Corrective measures
1	Power supply voltage is below specified range	Set power supply to proper voltage within specified range.
2	Main circuit rectifier is broken	Replace servo amplifier.
3	Input voltage dropped. Or momentary interruption occurred.	Check main power supply not to occur momentary interruption or power drop.
4	Low voltage without specification is supplying to main circuit (R.S.T)	Check main circuit voltage not to supply around power from other to R. S. T when main circuit OFF.
5	Faulty internal circuit of servo amplifier	Replace servo amplifier

■ Alarm Code 63H (Phase missing of main power supply)

Operating state when alarm occurred

Operating state	Possible causes		
	1	2	3
When control power supply is turned on		High	
When main power supply is turned on	High		High
During motor operation	Low		
Alarm occurred although specified single phase power input			High

Corrective measures

Cause		Corrective measures
1	Input missing one of the R, S, T phases	Check wrong wiring and correct it.
2	Faulty amplifier internal circuit	Replace servo amplifier
3	Servo amplifier is not specified for single phase	• Confirm model number and delivery specification of that servo amplifier. Replace with proper amplifier for single phase. • Change parameter for single phase Amplifier.

■ Alarm Code 71H (Control power supply error)

Operating state when alarm occurred

Operating state	Possible causes		
	1	2	3
When control power supply is turned on	Low	High	
During operation	Low		High

Corrective measures

Cause		Corrective measures
1	Faulty amplifier internal circuit	Replace servo amplifier.
2	Power supply input voltage is below specified range	Set voltage within specified range.
3	Fluctuation or momentary interruption of input power voltage occurred.	Check power supply

■ Alarm Code 71H (Control power supply error)

Operating state when alarm occurred

Operating state	Possible causes		
	1	2	3
When control power supply is turned on	Low	High	
During operation	Low		High

Corrective measures

Cause		Corrective measures
1	Faulty amplifier internal circuit	Replace servo amplifier.
2	Power supply input voltage is below specified range	Set voltage within specified range.
3	Fluctuation or momentary interruption of input power voltage occurred.	Check power supply

■ Alarm Code 81H (pulse signal error of A and B phases 1)

■ Alarm Code 82H (Absolute encoder signal disconnection)

■ Alarm Code 83H (Signal error of A and B phases in the external encoder)

■ Alarm Code 84H (Communication error between encoder and amplifier)

■ Alarm Code 87H (CS disconnection)

Operating state when alarm occurred

Operating state	Possible causes					
	1	2	3	4	5	6
When control power supply is turned on	High	High	High	High	High	High
After servo ON is input				High	High	
During operation	Low			High	High	

Corrective measures

Cause		Corrective measures
1	Encoder wiring: • Incorrect wiring • Loose connector • Poor connector contact • Encoder cable is too long • Encoder cable is too thin	• Check wrong wiring and correct it. • Check if encoder power voltage of motor is over 4.75V. Correct when the voltage is below it.
2	Wrong setting of amplifier encoder classification	Correct setting.
3	Setting of encoder classification differs from that of actual motor encoder.	Replace with servomotor attached with correct encoder.
4	Faulty amplifier control circuit	Replace servo amplifier.
5	Faulty servomotor encoder	Replace servomotor.
6	Parameter setting is for full close servo system.	Set parameters for semi-close system.

■ Alarm Code 85H (Encoder initial process error)

Operating state when alarm occurred

Operating state	Possible causes			
	1	2	3	4
When control power supply is turned on	High	High	High	High

Corrective measures

Cause		Corrective measures
1	Encoder wiring: • Incorrect wiring • Loose connector • Poor connector contact • Encoder cable is too long • Encoder cable is too thin	• Check wrong wiring and correct it. • Check if encoder power voltage of motor is over 4.75V. Correct if necessary.
2	Wrong encoder classification setting of amplifier	Correct setting.
3	Faulty amplifier control circuit	Replace servo amplifier.
4	Faulty servomotor encoder	Replace servomotor.

■ Alarm Code 86H (CS error)

Operating state when alarm occurred

Operating state	Possible causes
	1
During motor operation	High

Corrective measures

Cause		Corrective measures
1	• Malfunction due to noise	Check if amplifier earth cable should be correctly grounded. Check shielding procedure of encoder cable. Add ferrite core as a countermeasure against noise.

■ Alarm Code 91H (Encoder command error)
■ Alarm Code 92H (Encoder FORM error)
■ Alarm Code 93H (Encoder SYNC error)
■ Alarm Code 94H (Encoder CRC error)
■ Alarm Code 95H (Encoder BUSY error)

This is an error detected at receiving section of absolute position detector in start-stop synchronization.

Operating state when alarm occurred

Operating state	Possible causes		
	1	2	3
When control power supply is turned on	Low	High	High

Corrective measures

Cause		Corrective measures
1	· Faulty encoder	· Replace servo motor
2	· Malfunction due to noise	Check if amplifier earth cable should be correctly grounded. Check shielding procedure of encoder cable. Add ferrite core as a countermeasure against noise.
3	· Incorrect encoder wiring	· Review the wiring between encoder and amplifier

■ Alarm Code A1H (Encoder error 1)

This is an error detected inside absolute position detector in Manchester.

Operating state when alarm occurred

Operating state	Possible causes	
	1	2
When control power supply is turned on	High	High
During operation		High

Corrective measures

Cause		Corrective measures
1	· Poor contact of battery cable	· Check the battery connector in the amplifier front.
2	· Battery voltage drop	· Check the battery voltage.

■ Alarm Code A2H (Error of absolute encoder battery)

This is an error detected at receiving section of absolute position detector in start-stop synchronization.

Operating state when alarm occurred

Operating state	Possible causes	
	1	2
When control power supply is turned on	High	High
During operation		High

Corrective measures

Cause		Corrective measures
1	· Poor battery cable contact	· Check the battery connector in the amplifier front.
2	· Battery voltage drop	· Check the battery voltage.

■ Alarm Code A3H (Encoder overheat)

This is an error detected at receiving section of absolute position detector in start-stop synchronization.

Operating state when alarm occurred

Operating state	Possible causes		
	1	2	3
When control power supply is turned on	Low	High	
During motor stoppage	Low	High	
During motor operation		High	High

Corrective measures

Cause		Corrective measures
1	Faulty encoder internal circuit	Replace servo motor
2	· Though motor itself does not overheat, ambient temperature of sensor is too high.	· Review the cooling method and keep the encoder ambient temperature below
3	· Motor overheat	· Review the cooling method of servomotor.

■ Alarm Code A4H (Overflow of absolute encoder revolution)

This is an error detected inside ABS. E.

Operating state when alarm occurred

Operating state	Possible causes
	1
When control power supply is turned on	Low
During motor operation	High

Corrective measures

Cause		Corrective measures
1	· Multi-revolution counter inside the encoder overflows.	·Encoder clear

■ Alarm Code B2H (Encoder error 2)

This is an error detected inside absolute position detector in Manchester.

Operating state when alarm occurred

Operating state	Possible causes	
	1	2
When control power supply is turned on	High	High
During operation	Low	High

Corrective measures

Cause		Corrective measures
1	· Faulty encoder internal circuit	· Replace servomotor.
2	· Malfunction due to noise	Check if amplifier earth cable should be correctly grounded. Check shielding procedure of encoder cable. · Add ferrite core as a countermeasure against noise.

■ Alarm Code B3H (Revolution counter error of absolute encoder)

■ Alarm Code B4H (One-revolution counter error of absolute encoder)

■ Alarm Code B6H (Encoder memory error)

This is an error detected inside of absolute position detector in start-stop synchronization.

Operating state when alarm occurred

Operating state	Possible causes
	1
When control power supply is turned on	High

Corrective measures

Cause		Corrective measures
1	· Faulty encoder internal circuit	· Replace servomotor.
2	· Malfunction due to noise	Check if amplifier earth cable should be correctly grounded. Check shielding procedure of encoder cable. · Add ferrite core as a countermeasure against noise.

■ Alarm Code B5H (Over-allowable speed of absolute encoder at turning ON)

This is an error detected inside of absolute position detector in start-stop synchronization.

Operating state when alarm occurred

Operating state	Possible causes	
	1	2
During motor stoppage	High	High
During motor operation	Low	High

Corrective measures

Cause		Corrective measures
1	· Faulty encoder internal circuit	· Replace servomotor.
2	· Malfunction due to noise	· Check if amplifier earth cable should be correctly grounded. · Check the shielding procedure of encoder cable. · Add ferrite core as a countermeasure against noise.

■ Alarm Code C1H (Over-speed)

Operating state when alarm occurred

Operating state	Possible causes				
	1	2	3	4	5
When control power supply is turned on	H	L			
Upon command input after Servo ON	L	H			H
When motor is started			H	H	
During operation (except when motor starting)		H	H		

Corrective measures

Cause		Corrective measures
1	Faulty amplifier control board	Replace servo amplifier.
2	Faulty servomotor sensor	Replace servomotor
3	Overshoot is too large during motor start.	Use the analog monitor of the remote controller to check the velocity. → If over shoot is too large, adjust the servo parameter → Change the acceleration/deceleration speed pattern command → Reducing the load inertia.
4	Incorrect wiring for U, V, W phases between amplifier and motor	Check wrong wiring and correct it.

■ Alarm Code C2H (Velocity control error)

Operating state when alarm occurred

Operating state	Possible causes				
	1	2	3	4	5
When control power supply is turned on					H
Upon servo ON input	H		H		
Upon command input	H	H	H		
When motor is started or stopped				H	

Corrective measures

	Cause	Corrective measures
1	Incorrect wiring for U, V, W phases between amplifier and motor	Check wrong wiring and correct it.
2	Incorrect wiring for A, B phases between INC-E and ABS-E encoder connection	Check wrong wiring and correct it.
3	Motor is vibrating (or oscillating)	Adjust servo parameter to stop the vibration (or the oscillation).
4	Overshoot and/or undershoot is too large	Use the analog monitor of the remote controller to check the velocity • Adjust servo parameter to reduce overshoot and/or undershoot. • Increase acceleration/deceleration command time. • Mask the alarm.
5	Faulty servo amplifier control circuit	Replace servo amplifier.

As this alarm may be detected during motor start or stop in cases where load inertia is large or is used for applications on G-force axis, velocity control error alarm should be set to "not detecting" at shipment.
When "detecting" is necessary, consult us.

■ Alarm Code C3H (Velocity feedback error)

Operating state when alarm occurred

Operating state	Possible causes	
	1	2
After command input	High	Low

Corrective measures

	Cause	Corrective measures
1	· Motor does not rotate.	· Check motor power line or connect it correctly.
2	· Faulty servo amplifier internal circuit	· Replace servo amplifier

■ Alarm Code D1H (Following error)

Operating state when alarm occurred

Operating state	Possible causes											
	1	2	3	4	5	6	7	8	9	10	11	12
When control power supply is turned on										H		
During stoppage at servo ON						H					H	
When command input is started	H	L	H	H	H		H	L	H		L	
During high speed start or stoppage	H	H					H	H	H		L	H
During operation with a long command		H					H	L			L	

Corrective measures

	Cause	Corrective measures
1	Position command frequency is too high, or acceleration/deceleration time is too short.	Review controller position command.
2	Load inertia is too large or motor capacity is too small.	Review load conditions, or change to larger capacity motor.
3	Holding brake is not released	Check and correct wiring. Replace servomotor if wiring is correct (and voltage is specified),
4	Motor is mechanically locked, or there is mechanical interference	Review mechanics
5	Among one or all of the U, V, W phases between amplifier and motor is disconnected.	Check wrong wiring and correct it.
6	At the stop timing (or complete positioning), Motor was forced to rotate caused by gravity or likely external force.	Review the load or replace with larger capacity motor.
7	• Current limit setting value is insufficient in spite that this function command input is active. • Set encoder pulse number does not match motors.	• A sufficient current limit value should be set or let this function void. • Correct the encoder pulse number of the motor.
8	Improper servo parameter setting (position loop gain, etc.)	Correct these parameters. (ex. enlarging the position loop gain).
9	Excess deviation setting is too small.	Set sufficient deviation value.
10	Faulty amplifier control board	Replace servo amplifier.
11	Faulty servomotor encoder	Replace servomotor.
12	Power supply voltage drop	Review power supply voltage

■ Alarm Code D2H (Error of position command pulse frequency 1)

Operating state when alarm occurred

Operating state	Possible causes
	1
After position command pulse input	High

Corrective measures

	Cause	Corrective measures
1	· Many command pulses are input beyond digital filter setting value (frequency).	· Decrease the frequency of command pulses input. · Increase digital filter setting frequency.

■ Alarm Code D3H (Error of position command pulse frequency 2)

Operating state when alarm occurred

Operating state	Possible causes	
	1	2
After position command pulse input	High	High

Corrective measures

Cause		Corrective measures
1	The frequency of command pulses input.	· Decrease the frequency of command pulses input.
2	Electric gear setting value is too high.	· Decrease electric gear setting value.

■ Alarm Code DFH (Test mode close)

Operating state when alarm occurred

Operating state	Possible causes
	1
After test mode close	High

Corrective measures

Cause		Corrective measures
1	· Normal operation	· Clear alarm to recover . (This is in considering to deviation left at controller after test mode).

■ Alarm Code E1H (EEPROM error)

Operating state when alarm occurred

Operating state	Possible causes	
	1	2
When control power supply is turned on	High	Low
During the operation for remote operator keys or PC interface		High

Corrective measures

Cause		Corrective measures
1	CPU is unable to read correct value from non-volatile memory built in the amplifier.	Replace servo amplifier
2	Faulty amplifier control board	Replace servo amplifier

■ Alarm Code E2H (EEPROM internal data error)

Operating state when alarm occurred

Operating state	Possible causes	
	1	2
When control power supply is turned on	Low	High

Corrective measures

Cause		Corrective measures
1	CPU is unable to read correct value from non-volatile memory built-in the amplifier.	Replace servo amplifier
2	・Unable to write to non-volatile memory at last turning OFF.	• After changing some parameters, confirm no alarm occurrence when power supply is connected to source again. →In case that an alarm continues, replace servo amplifier.

■ Alarm Code E3H (Internal RAM error)

■ Alarm Code E4H (Process error between CPU and ASIC)

Operating state when alarm occurred

Operating state	Possible causes
	1
When control power supply is turned on	High

Corrective measures

Cause		Corrective measures
1	・Faulty amplifier control board	Replace servo amplifier.

■ Alarm Code E5H (Parameter error 1)

Operating state when alarm occurred

Operating state	Possible causes	
	1	2
When control power supply is turned on	High	High
After changing any system parameters	High	

Corrective measures

Cause		Corrective measures
1	・The value of system parameter is outside the setting range.	・Check servo amplifier model. ・Check the setting value of system parameter and correct it. →Turn on the power supply again and check no alarm.
2	・Faulty servo amplifier	・Replace servo amplifier

■ Alarm Code E6H (Parameter error 2)

Operating state when alarm occurred

Operating state	Possible causes	
	1	2
When control power supply is turned on	High	High
After changing any system parameters	High	

Corrective measures

Cause		Corrective measures
1	• The setting value of system parameter does not match that of actual hard ware. • Wrong combination of system parameter setting	• Check servo amplifier model. • Check the setting value of system parameter and correct it. →Turn on the power supply again and check no alarm.
2	• Faulty servo amplifier	• Replace servo amplifier

■ Alarm Code F1H (Task process error)

Operating state when alarm occurred

Operating state	Possible causes
	1
During operation	High

Corrective measures

Operating state		Possible causes
1	• Faulty amplifier control circuit	• Replace servo amplifier.

■ Alarm Code F2H (Initial timeout)

Operating state when alarm occurred

Operating state	Possible causes	
	1	2
When control power supply is turned on	High	High

Corrective measures

Cause		Corrective measures
1	• Faulty amplifier internal circuit	Replace servo amplifier.
2	• Malfunction due to noise	• Check that amplifier earth cable should be correctly grounded. • Add ferrite core as a countermeasure against noise.

Taking Measures in case of Operational Malfunction

On the occasion of operational malfunction without an alarm, the following explains checking points, inferable causes, and countermeasures. Consult your Sanyo Denki dealer should the malfunctions persist even after performing these troubleshooting measures.

Take note that it is dangerous to perform some of these procedures without first switching off the main power supply.

No	Malfunction	Checking points	Inferable Causes and countermeasures
1	7-segment LED does not display "≡" after main power supply is switched on	① Check voltage of control power input terminals	• Check power supply if voltage is low • Check wiring and tightening of screws if there is no voltage
		② Check if red "CHARGE" LED is on	• Faulty power supply circuit → Replace servo amplifier
2	7 segment LED is displaying a flashing "8" (servo ON status), but motor is not rotating	①Check if position command is inputted	• Input position command.
		② Check if servo lock is on	• Check tightening of screw as motor power line is not connected
		③ Check if current limit is inputted	• Motor does not rotate, since current limiter is on and motor cannot generate torque against the load torque.
		④ Check if deviation clear remains on	• Chancel the deviation clear input (CN1-34 pin)
3	Unstable servomotor rotation. Lower rotation than command.	① Check if proportional control is on	• Stop proportional control input
		② Check if current limiter is on.	• Stop current limiter input.
4	Servomotor rotates momentarily before stopping.	① Check motor power lines	• One of the power lines is disconnected.
		②Check encoder resolution setting.	• Correct the setting and turn on the power.

Nc	Malfunction	Checking points	Inferable Causes and countermeasures
5	Servomotor accelerates continuously.	① Check motor power lines	Phase sequence of motor power lines is not correct
		② Check encoder cable	A and B phases of the encoder are incorrect.
6	Motor vibrates at frequencies over 200Hz.	—	• Reduce velocity loop gain • Set torque command low pass filter and notch filter.
7	Excessive overshoot/undershoot during start/stop.	—	• Servo tuning with setting "High" • Lower velocity loop gain • Increase integral time constant • Loosen acceleration / deceleration command pattern • Use position command low pass filter
8	Abnormal acoustic noise	①Check for mechanical faults.	• Operate servomotor with no load • Check centering and unbalance on coupling
		②Operate at low speed and check the noise period, random or frequent.	• Check if encoder signal line is pair-twisted and shielded. • Check if encoder and power lines are put together in the same duct. • Check if power supply voltage drops.

2-6 Connect To PC

Connect the RS232C cable to COM Port of computer. If the sample fabric weighing scale was required.

Chapter 3：Troubleshooting

Error Messages and Solutions

ERROR MESSAGE	CAUSES	SOLUTION
Connect error	AutoLab TF CTRL checks the position of machine and then finds the PLC is offline.	1. Check that if the main power switch is on. 2. Check that if the emergency stop knob is release. 3. Check that if the “0” button is pressed. 4. Check that if the power source is correct, it should be signal phase and AC220V. 5. Check that if the power cable is connected. 6. Check that if the RS232C cable is connected properly. 7. Check that if the “ON LINE” LED is blinking, if not check the RS485 Plug or change LA50B CPU module.
Dispense Error	1. Solution is under stock. 2. The injector didn’t work properly. 3. The scale didn’t work properly.	1. Refill the solution and then setup the under stock warming in software to prevent situation occur again. 2. Check the injector by following： i. If air pressure is set to 4.5~6.0 kg/cm^2. ii. Clean the surface of injector. iii. Check the dip tube of injector if there is leakage. iv. Check if the scraper in the lid is hurt. 3. Check the scale by following： i. If the scale is on. ii. Check that if the container is put on the balance.. iii. Check if there is anything touching the scale.
Dye Pot Tray Is Unable To Move Into Dispense Position	1. Inlet conveyor failure 2. Inlet limit sensor failure 3. The tray inlet cylinder failure 4. Scales sensor failure 5. Scales unstable	1. Check the inlet by following: i. Check if the OUTPUT No. 13 signal of LA50B D.I.O 0 module is working after pressing “ACK confirm button” is pushed, if not, replace the module. ii. Check if the signal cables are properly connected. 2. Check if the air valve for moving dye pot works; if not, replace the valve. 3. Check if the sensor of the air cylinder for moving the dye pot works properly; if not, replace the sensor. 4. Check if scales positioning sensor works properly; if not, replace the sensor. 5. Please refer to **“Scales unstable”**.
Robot Can Not Move	1. Safety doors signal can’t be detected. 2. The servo amplifier indicates red light.	1. Check the safety doors by following： i. Check that if all the safety doors close certainly. ii. Check if the safety door sensors work properly. 2. Check the servo amplifier by following： i. Turn off and Turn on power again to reset the amplifier to see if the red LED is still remain. If yes, contact the agent for replacing the servo amplifier. ii. If it is only problem when motor start to move, replace the amplifier.

ERROR MESSAGE	CAUSES	SOLUTION
		iii. Replace the LA50B servo module.
Robot Can Not Reset	Reset sensor failure	1. Check that if the reset sensor works properly. If not replace the sensor. If yes re-adjust the position of reset sensor. 2. Replace LA50B servo module. 3. Check that if the robot works properly. If not, check that if the servo amplifier shows warning. 4. Check if all the safety doors are closed.
Can't turn on scale	1. Vibration on floor. 2. Air flow inside the machine. 3. Defective scale.	1. Install the anti-vibration material, such like rubber pad to check if can resolve the vibration. 2. Take the scale to a non-vibrate and non-air flow environment and turn on scale to check if problem caused by above. If not, replace the scale 3. Ensure anti-wind acrylic plate and rubber skirt have been installed. 4. Ensure the doors are all close during power on machine.
Can Not Reset Scale	1. Can't read data from scale. 2. Scale unstable.	Refer to **"Can't read data from scale"** and**" Scale unstable"**.
Can Not Read Data From Scale	1. Scale is off. 2. Communication failure.	1. Check that if the power line of the balance is connected properly. 2. Check the communication by following : i. Check the connection of the RS232 cable. ii. Replace the RS232 cable if it is defective. iii. Check the setting of the scale. iv. Replace the scale if it is defective.
Scale Unstable	Bad environment will affect the stability, like as wind blows to balance directly, vibration, high frequency and magnetic field, etc.	1. Check if the scale is level. 2. To eliminate affected causes (wind, vibration and high magnetic filed etc). 3. Replace the scale if it is defective. 4. Check that the container is on scale stable and no touch other objects.
Agitation failure	1. Agitation pulley needs lubrication. 2. Drive wheel of agitation motor is loosen. 3. Connector of agitation motor loosen. 4. Agitation motor failure. 5. Agitation controller failure. 6. Agitation control board failure. 7. Agitation belt broken.	1. Grease the agitation pulley. 2. Ensure connector is in well connection. 3. Fix the drive wheel. 4. Replace agitation motor to assure its defectiveness. 5. Replace agitation controller to assure its defectiveness. 6. Replace agitation control board (DS Relay Board) to assure its defectiveness. 7. Replace agitation belt.
Agitation Not Smooth	1. The bottom of glass bottle is not flat. 2. The stirrer is worn. 3. The bearing of agitation pulley is worn. 4. The bearing of agitate motor is worn. 5. The agitation belt is not with correct adjustment.	1. Replace the defective bottle. 2. Replace the defective stirrer. 3. Grease the bearing of agitation pulley. 4. Replace the defective pulley. 5. Adjust the fix position of agitation motor to ensure the agitation belt is set to a tighten position. **Please notice the belt should be tension but not very tight.**
Agitation Noisily	1. Agitation motor is noisy. 2. Agitator makes noise. 3. The belt of agitation is not adjusted correctly.	1. Adjust agitation motor position and lubricate the motor. 2. Check if the pulleys work properly and smoothly; if not, lubricate it. 3. Adjust the position and tension of belt. 4. Check agitation belt is not too loose or tight and lubricate by belt wax.
Auto-Refill Failure	Water tank can't auto-refill	1. No water supplied from main water source. 2. The water pressure regulator adjusted to wrong or lower pressure. 3. Replace the floater to assure its defectiveness.

ERROR MESSAGE	CAUSES	SOLUTION
Find air cylinder move not smoothly	1. Air cylinder is not lubricated for a while. 2. Air pressure inlet and outlet on fast-fit connectors are not adjusted correctly.	1. Recommend to grease the arm of air cylinder monthly. But the frequency should be depended on the environment quality of Lab. 2. Adjust the air pressure on inlet and outlet fast-fit connectors to ensure the cylinder move smoothly, not too fast and not to slow to cause vibrated movement.
Dye Pot Tray Is Unable To Move Into Dispense Position **(AutoLab TF 88/128/168)**	1. Inlet conveyor failure 2. Inlet limit sensor failure 3. The tray inlet cylinder failure	1. Check the inlet conveyor by following : a. Check the output bit7 LED of No.0 LA50B DIO module illuminated? If not replace the PLC. If yes, check the SSR-1 and replace it if defective. b. Check the capacitor of conveyor motor works properly. 2. Check the limit sensor by following : a. Check the output bit10 LED of No.0 LA50B DIO module illuminated? If not replace the PLC. b. Check the signal line connects properly. c. Check the sensor work properly? If not replace the sensor. 3. Check the front/middle magnetic sensors of the conveyor inlet cylinder work properly? If not replace the sensor.
Dye Pot Tray Is Unable Move To Outlet Conveyor (**AutoLab TF 88/128/168)**	1. Middle conveyor failure 2. Outlet limit sensor failure 3. Outlet cylinder failure 4. Outlet conveyor failure	1. Check the middle conveyor by following : a. Check the output bit11 LED of No.0 LA50B DIO module illuminated? If not replace the PLC. If yes, check the SSR-2 and replace it if defective. b. Check the capacitor of conveyor motor works properly. 2. Check the limit sensor by following : a. Check the output bit12 LED of No.0 LA50B DIO module illuminated? If not replace the PLC. b. Check the signal line connects properly. c. Check the sensor work properly? If not replace the sensor. 3. Check the front/back magnetic sensors of the conveyor outlet cylinder work properly? If not replace the sensor. 4. Check the outlet conveyor by following : a. Check the output bit9 LED of No.0 LA50B DIO module illuminated? If not replace the PLC. If yes, check the SSR-3 and replace it if defective. b. Check the capacitor of conveyor motor works properly.
Dye pot tray is unable to move in dispense area.	1. Not to push “CONFIRM” button. 2. The dye pot tray push cylinder is not detected at “front” position. 3. The dye pot tray U/D cylinder is detected at “down” position. 4. Air pressure too low for cylinder to active. 5. Main air pressure is not enough.	1. Press “CONFIRM” push button. 2. Check if the magnetic sensor of front position of dye pot tray push cylinder works? If not, replace the magnetic sensor. 3. Check if the magnetic sensor of down position of dye pot tray U/D cylinder works? If not, replace the magnetic sensor. 4. Adjust the air inlet pressure at fast-fit connector to ensure enough pressure to move cylinder. 5. Ensure the air pressure is set to 4.5~6.0 kg/cm^2. 6. Ensure the main air pressure is ON.
Dye pot tray is unable to move to down position to	1. The dye pot tray U/D cylinder is detected at	1. Check if the magnetic sensor of down position of dye pot tray U/D cylinder works? If not, replace

ERROR MESSAGE	CAUSES	SOLUTION
put tray on pan of scale	"down" position. 2. Dye pot tray U/D cylinder need lubrication. 3. Air pressure too low for cylinder to active. 4. Main air pressure is not enough.	the magnetic sensor. 2. Adjust the air inlet pressure at fast-fit connector to ensure enough pressure to move cylinder. 3. Ensure the air pressure is set to 4.5~6.0 kg/cm^2. 4. Ensure the main air pressure is ON.
Servo amplifier shown alarm message	1. Please refer to **2-5-3 Error message Table For Servo Amplifier**	1. Please refer to **2-5-3 Error message Table For Servo Amplifier**
Robot always stop at particular position	1. Incorrect parameter in "Disp safe area" of AutoLab TF ctrl program. 2. Broken wire in cable of servo motor encoder cable when bending	1. Check the setting value of "Disp safe area" in "position setup" of "diagnostics" of AutoLab TF ctrl program should be correct to its model. 2. Check if the alarm 4 LED on at the specified servo amplifier? If yes, check the motor encoder cable to see if any wire inside is broken. 3. If one broken wire found inside the connector of cable or cable itself, please solder it to fix. If there are many wires are broken, replace the whole cable.